LENZ
LENZ
CP-752-10
FPA-13
FLUIDPOWER
www.lenzinc.com / 937/277-9364 / Lenz Catalog FPA-13

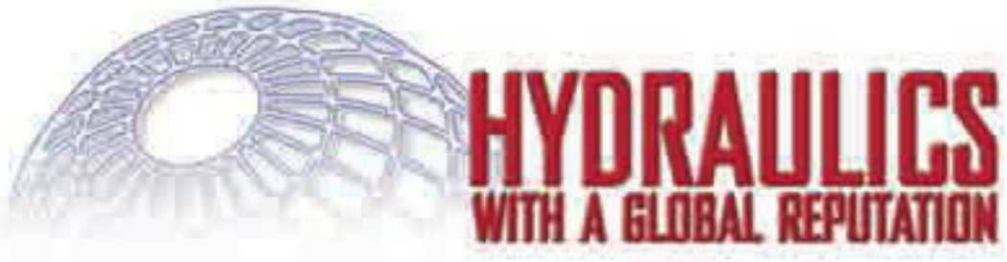

The goal of Lenz is to help our Distributors, OEM's and customers succeed by providing the best hydraulic engineered products. Building upon this determination, we've enhanced the Lenz catalogs and our website to feature even more detailed information for ease of specifying and ordering. We at Lenz feel our new catalog and website are easier to navigate, read and understand our products. We will continue to add new innovative hydraulic products to our product line. We hope you'll agree we have succeeded in these pursuits.

Lenz

Hydraulics with a Global Reputation

P.O. Box 1044 Dayton, Ohio 45401-1044
3301 Klepinger Road Dayton, Ohio 45406

Phone: 937/277-9364 FAX: 937/277-6516 www.lenzinc.com

LENZ

FILTRATION

Spin On Canister Filters
Tank Mounted Filters
Tank Mounted with Breather
Tank Mounted Strainers
Medium Pressure Filter

Diffusers
Suction Strainers
Disc Strainers
Disc Diffusers
SAE Weld Couplings

Phone: 937/277-9364 FAX: 937/277-6516 www.lenzinc.com

Filters and Strainers Table of Contents

Suction & Return Canister Filter

In Tank Filters

Tank Mount Strainers

Weld Flanges

Return Line Sump Disc Diffusers

Series	Filters and Strainers	Section A Page	
SF	Product Overview Photo		
	Product Overview Index		
CP-250/380	Return Line Canister Filter	1a	
CP-500/750/1010	Suction & Return Canister Filter	2a-3a	
CP-504/754	Suction & Return Canister Filter	4a-5a	New Model
CP-1280/CP-1580	Suction & Return Canister Filter	6a-7a	
CP-1500/1520	Suction & Return Canister Filter	8a-9a	
DH	Heavy Duty Line Filters	10a-11a	
LIT	In Tank Filters	12a-13a	
LITA-1010	In Tank Filters	14a-15a	New Model
RTF	Aluminum Tank Immersed	16a-17a	New Model
LFT	In Tank Filter	18a-19a	New Model
TFR	In Tank In-To-Out Flow	20a-21a	New Model
LITB	In Tank Filter w/ Breather	22a-23a	
TMR	Tank Mount or Line Mounted	24a-25a	New Model
TIF	Low Profile Intake Filter	26a-27a	New Model
CP, MC, DP	Filter Indicators	28a	
49, N49	Sump Strainers	29a-30a	New Model
LTM	Tank Mount Strainers	31a	New Model
LTMA	Tank Mount Strainers	32a	New Model
LTMAB	Tank Mount Strainers	33a	
LTF	Tank Mount Strainers	34a	
WFA	Weld Flange	35a	New Model
AN-WM	SAE Half Coupling	36a	New Model
LW-BA	SAE Half Coupling	37a	
AN-WB	SAE-NPT Threaded Coupling	37a	
LTMD	Tank Mount Diffusers	38a	New Model
LDFD	Tank Mount Diffusers	39a	
L-G	Disc Sump Strainer	40a	
ML-G, MD	Magnetic Sump Strainer	41a	
R	Return Line Sump Disc Diffusers	42a	
	Wire Mesh Chart	43a	

Phone: 937/277-9364 FAX: 937/277-6516 www.lenzinc.com

Canister Filter

Return Line Applications

CP-250/380, CPA-380

Specifications

- Working pressure 200 P.S.I. (14 Bar) 80 PSI ΔP w/o bypass
- Operating Temperatures -25° F to +212° F (-32° C to +100° C)
- Flows to 7 GPM (26 LPM) Return
- Flows to 2 GPM (7 LPM) Suction
- Die Cast Aluminum casting
- Buna Seals
- For use with petroleum based fluids
- Maximum pressure differential 80 P.S.I. (5 Bar)
- Bypass in filter elements
- .90 lbs shipping weight

Options

- NPT or SAE ports
- Indicator ports
- 10, 25, 40 micron elements
- 0, 18, 25 P.S.I.D. Bypass options

CP-250, CP-380
CPA-380

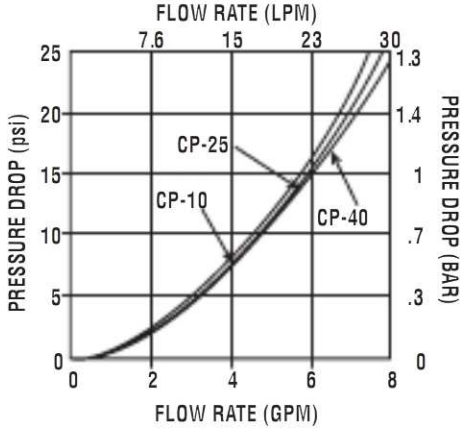

Average Pressure drop through clean assembly with 150 SUS oil at 100F

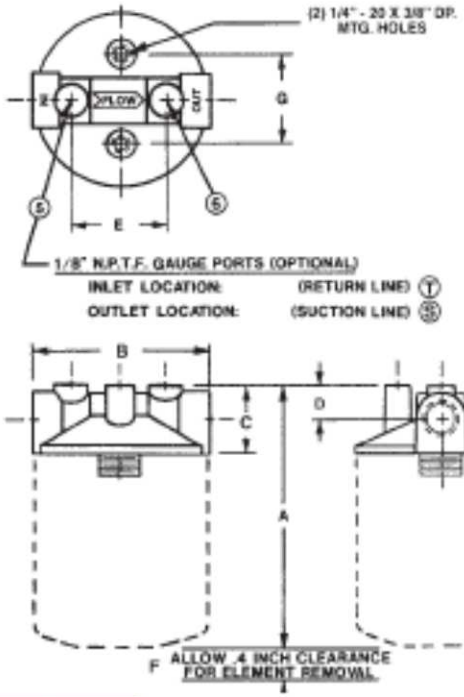

Dimensional Details

MODEL	PORT		A	B	C	D	E	F	G
CP-250	1/4" NPT	IN	4.5	3.1	1.13	0.6	1.60	0.4	1.5
		MM	114.3	78.7	28.7	14.2	41.7	10.2	38.1
CP-380	3/8" NPT	IN	4.5	3.1	1.13	0.6	1.60	0.4	1.5
		MM	114.3	78.7	28.7	14.2	39.1	10.2	38.1
CPA-380	9/16"-18 SAE	IN	4.5	3.1	1.13	0.6	1.60	0.4	1.5
		MM	114.3	78.9	28.7	14.2	39.1	10.2	38.1

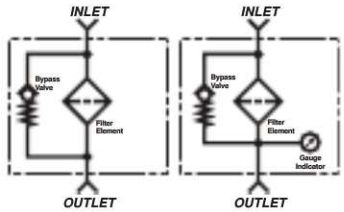

Ordering Code

CPA - 380 - 1018 - *

SERIES	
CP	NPT
CPA	SAE

SIZE
250
380

ELEMENTS	
1000	10 MIC. NO BYPASS
1018	10 MIC. 18 P.S.I. BYPASS
1025	10 MIC. 25 P.S.I. BYPASS
2510	25 MIC. 10 P.S.I. BYPASS
2525	25 MIC. 25 P.S.I. BYPASS
4000	40 MIC. NO BYPASS
4018	40 MIC. 18 P.S.I. BYPASS

INDICATOR PORTS	
OMIT	NONE
T	1/8 NPT RETURN
S	1/8 NPT SUCTION

For Indicators See Page 28a

Filter Elements

MODEL NUMBER	MICRON RATING	BYPASS	AVG BETA	AREA IN²	AREA CM²	ELEMENT THREAD
CP-1000	10	NONE	2	126	818	3/4"-16 UNF
CP-1018	10	18	2	113	733	3/4"-16 UNF
CP-1025	10	25	2	113	733	3/4"-16 UNF
CP-2510	25	10	2	129	838	3/4"-16 UNF
CP-2525	25	25	2	129	838	3/4"-16 UNF
CP-4000	40	NONE	2	126	838	3/4"-16 UNF
CP-4018	40	18	2	126	818	3/4"-16 UNF

Canister Filters/Disposable Type

Suction or Return Line Application
Model Series CP-500, 750, 1000, 1010, 1030

Specifications

- Working pressure 200 P.S.I. (14 Bar) 80 PSI ΔP w/o bypass
- Operating Temperatures -22° F to +212° F (-32 C to +100 C)
- Flows to 25 GPM (96 LPM) Return
- Flows to 5 GPM (19 LPM) Suction
- 1/2", 3/4", 1" Ports
- Aluminum Casting — Die Cast
- Buna Seals
- For use with petroleum based, high water (HWCF) water glycols and water/oil emulsions fluids
- Element post threads 1"-12 UNF, 1 1/8"-16 UNF
- 2-3 (lbs.), 1.4 (kgs.) shipping weight

Options

- NPT or SAE Ports (CP-500, 750, 1010)
- 3, 10, 25, micron cellulose, synthetic elements
- Water absorbing elements -10 micron
- 100 wire mesh element
- Visual indicators
- 2.5, 5, 15, 25, blocked bypass options for suction or return

CP-501
CP-751
CP-1011

CP-500, CP-750, CP-1000/CP-1010 Series

CP-1030 Series

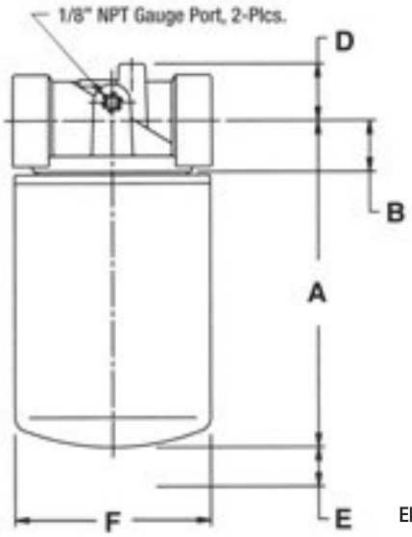

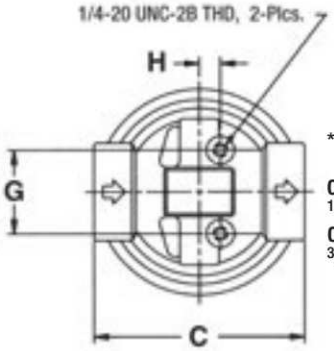

**Head casting has two mounting posts with threads.
On CP-500, CP-750 & CP-1010: 1/4"-20 thread 1 1/2" apart.
On CP-1000 & CP-1030: 3/8"-16 thread 1 7/8" apart.

Element Removal Clearance

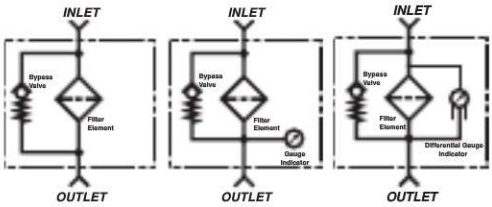

Dimensional Detail

Model	PORT		A	B	C	D	E	F	G	H	I
CP-500	1/2"	IN	6.2	1	3.8	1.1	0.8	3.7	1.5	0.4	1/4-20 UNC-2B
		MM	157	25	97	28	20	94	38	10	
CPL-500	1/2"	IN	9.6	1	3.8	1.1	0.8	3.7	1.5	0.4	1/4-20 UNC-2B
		MM	244	25	97	28	20	94	38	10	
CP-750	3/4"	IN	6.2	1	3.8	1.1	0.8	3.7	1.5	0.4	1/4-20 UNC-2B
		MM	157	25	97	28	20	94	38	10	
CPL-750	3/4"	IN	9.6	1	3.8	1.1	0.8	3.7	1.5	0.4	1/4-20 UNC-2B
		MM	244	25	97	28	20	94	38	10	
CP-1010	1"	IN	6.2	1	3.8	1.1	0.8	3.7	1.5	0.4	1/4-20 UNC-2B
		MM	157	25	97	28	20	94	38	10	
CPL-1010	1"	IN	9.6	1	3.8	1.1	0.8	3.7	1.5	0.4	1/4-20 UNC-2B
		MM	244	25	97	28	20	94	38	10	
*CP-1000	1"	IN	6.4	1	3.8	0.9	0.8	3.8	1.5	.4	3/8-16 UNC-2B
		MM	163	25	97	23	20	97	38	10	
CP-1030	1"	IN	11.4	1	3.8	0.9	0.8	4.3	1.5	.4	3/8-16 UNC-2B
		MM	290	25	97	23	20	109	38	10	

*SAE not available

Phone: 937/277-9364 FAX: 937/277-6516 www.lenzinc.com

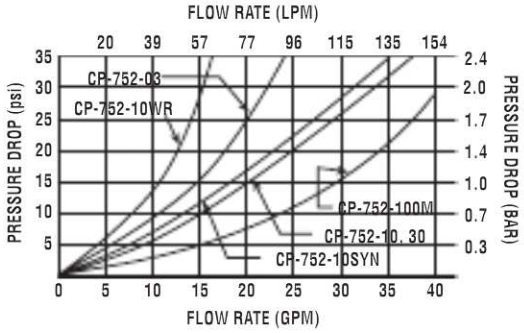

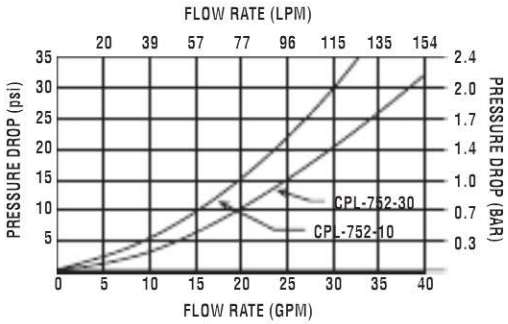

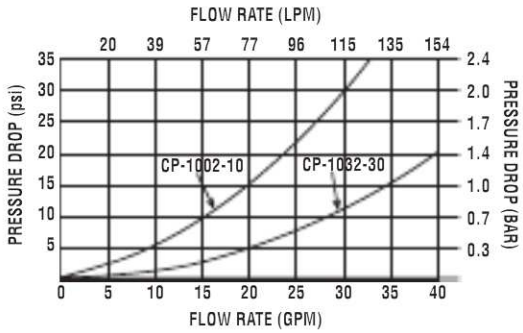

Temperature 100°F Viscosity 150SUS

Average Pressure drop through clean assembly with 150 SUS oil at 100F

Ordering Code

CP — * — 750 — 10 — P — T — MC-12

SERIES	
CP	NPT
CPA	SAE

ELEMENT LENGTH	
*OMIT	STD.
L	EXTD.

MODEL
500
750
1010
1000
1030

MEDIA	MODEL	LENGTH STD.	LENGTH EXT.
3	3 MIC CELLULOSE 500, 750, 1010	X	
10	10 MIC CELLULOSE 500, 750, 1010, 1000, 1030	X	X
10 SYN	10 MIC SYNTHETIC 500, 750, 1010	X	
10 WR	10 MIC WATER REMOVAL 500, 750, 1010	X	
30	25 MIC CELLULOSE 500, 750, 1010	X	X
100M	140 MIC SS WIRE MESH 500, 750, 1010	X	

BYPASS	
P	(15 P.S.I.)
R	(25 P.S.I.)
V	(5 P.S.I.)
H	(2.5 P.S.I.)
B	(NO BYPASS)

IND. PORTS	
OMIT	NONE
T	1/8 NPT RETURN
S	1/8 NPT SUCTION

INDICATING GAUGES
(T) MC-12
(T) MC-20
(T/S) CP-2
(T) GLY-MC-20
(S) 135080
(S) VAC-3-20
OMIT
DP-75

Replacement Elements

MODEL NUMBER	MEDIA TYPE	IN²	CM²	ELEMENT THREAD	RATING B(X)=2/20/75
CP-752-03	3 MICRON CELLULOSE	390	2505	1"-12 UNF	2u/5u
CP-752-10	10 MICRON CELLULOSE	550	3532	1"-12 UNF	10u/22u/33u
CPL-752-10	10 MICRON CELLULOSE	720	4624	1"-12 UNF	10u/22u/33u
CP-752-30	25 MICRON CELLULOSE	550	3532	1"-12 UNF	29u/46u/54u
CPL-752-30	25 MICRON CELLULOSE	720	4624	1"-12 UNF	29u/46u/54u
CP-752-10SYN	10 MICRON SYNTHETIC	370	2376	1"-12 UNF	4u/10u/12u
CP-752-10WR	10 MIC WATER ABSORPTION	550	3532	1"-12 UNF	8u/25u/30u
CP-752-100M	100 SS WIRE MESH	90	578	1"-12 UNF	140u
CP-1002-10	10 MICRON CELLULOSE	453	2922	1 1/8"-16 UNF	9u/20u/23u
CP-1032-10	10 MICRON CELLULOSE	1672	10787	1 1/8"-16 UNF	8u/33u/53u

Beta Rating Of 2 = 50 % Efficiency
Beta Rating Of 20 = 95 % Efficiency
Beta Rating Of 75 = 98.7 % Efficiency

Note: 80 P.S.I. Pressure Drop Maximum Without Bypass Valve In Filter Head

For indicator gauge specifications see page 28a

Canister Filters/Low Profile

Suction or Return Line Application
Model Series-CP (NPT & SAE Ports)

CP-504, 754

Specifications

- Working pressure 200 P.S.I. (14 Bar) 80 PSI ΔP w/o bypass
- Operating Temperatures -22° F to +212° F (-32 C to +100 C)
- Flows to 22 GPM (83 LPM) Return
- Flows to 5 GPM (19 LPM) Suction
- 1/2", 3/4" Ports
- Aluminum Casting — Die Cast
- Buna Seals
- For use with petroleum based, high water water glycols and water/oil emulsions fluids
- Element post threads 1"-12 UNF
- 2-3 (lbs.), 1.4 (kgs.) shipping weight

Options

- NPT or SAE Ports
- 3, 10, 25, micron cellulose, synthetic elements
- Water absorbing elements -10 micron
- 100 wire mesh element
- Visual indicators
- 2.5, 5, 15, 25, blocked bypass options for suction or return

CP-504, CP-754 *(New Low Profile Design)* — *CP-752* — *CP-505* *CP-755*

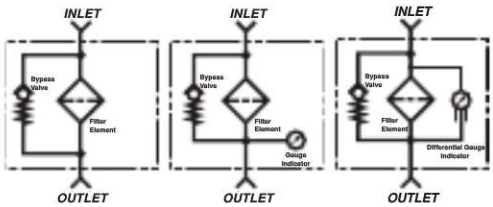

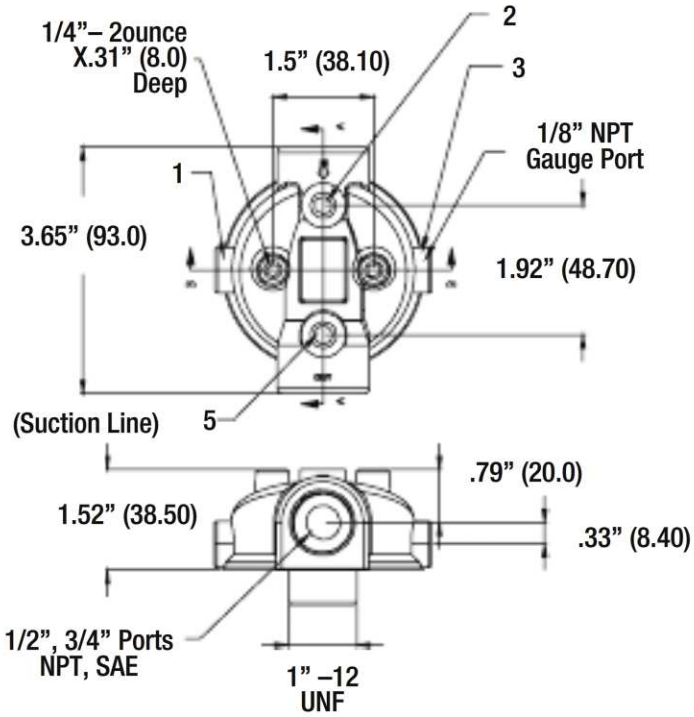

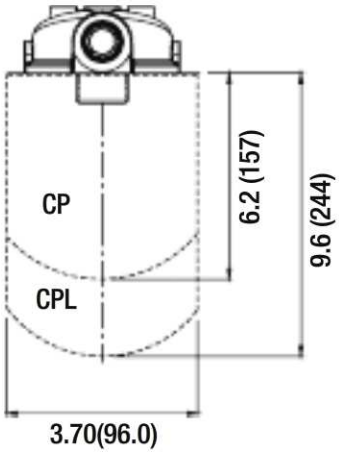

Allow 63 clearence for element removal.

Phone: 937/277-9364 FAX: 937/277-6516 www.lenzinc.com

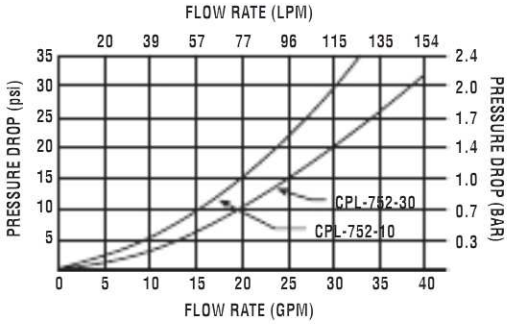

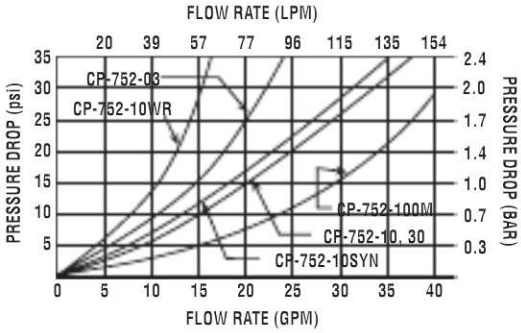

Temperature 100°F Viscosity 150SUS

Average Pressure drop through clean assembly with 150 SUS oil at 100F

Ordering Code

CP — * — 754 — 10 — P — T — MC-12

SERIES	
CP	NPT
CPA	SAE

CPA not available in 3/4 port

ELEMENT LENGTH	
*OMIT STD.	
L	EXTD.

MODEL
504
754

MEDIA	MODEL	LENGTH STD.	LENGTH EXT.
3	3 MIC CELLULOSE 500, 750, 1010	X	
10	10 MIC CELLULOSE 500, 750, 1010, 1000, 1030	X	X
10 SYN	10 MIC SYNTHETIC 500, 750, 1010	X	
10 WR	10 MIC WATER REMOVAL 500, 750, 1010	X	
30	25 MIC CELLULOSE 500, 750, 1010	X	X
100M	140 MIC SS WIRE MESH 500, 750, 1010	X	

BYPASS	
P	(15 PSI)
R	(25 PSI)
V	(5 PSI)
H	(2.5 PSI)
B	(NO BYPASS)

IND. PORTS	
OMIT	
T	1/8 NPT RETURN
S	1/8 NPT SUCTION

INDICATING GAUGES	
(T)	MC-12
(T)	MC-20
(T/S)	CP-2
(T)	GLY-MC-20
(S)	135080
(S)	VAC-3-20
	OMIT

Replacement Elements

MODEL NUMBER	MEDIA TYPE	IN²	CM²	ELEMENT THREAD	RATING B(X)=2/20/75
CP-752-03	3 CELLULOSE	390	2505	1"-12 UNF	2u/5u
CP-752-10	10 CELLULOSE	550	3532	1"-12 UNF	10u/22u/33u
CPL-752-10	10 CELLULOSE	720	4624	1"-12 UNF	10u/22u/33u
CP-752-30	25 CELLULOSE	550	3532	1"-12 UNF	29u/46u/54u
CPL-752-30	25 CELLULOSE	720	4624	1"-12 UNF	29u/46u/54u
CP-752-10SYN	10 SYNTHETIC	370	2376	1"-12 UNF	4u/10u/12u
CP-752-10WR	10 WATER ABSORPTION	550	3532	1"-12 UNF	8u/25u/30u
CP-752-100M	100 SS WIRE MESH	90	578	1"-12 UNF	140u

Beta Rating Of 2 = 50 % Efficiency
Beta Rating Of 20 = 95 % Efficiency
Beta Rating Of 75 = 98.7 % Efficiency

Note: 80 P.S.I. Pressure Drop Maximum Without Bypass Valve In Filter Head

For indicator gauge specifications see page 28a

Canister Filters/Disposable Type

Suction or Return Line Application
Model Series CP-1280, 1250, 1580

Specifications

- Working pressure 150 P.S.I. (10 Bar) 80 PSI ΔP w/o bypass
- Operating Temperatures -22° F to +212° F (-32° C to +100° C)
- Flows to 80 GPM (230 LPM) Return
- Flows to 30 GPM (58 LPM) Suction
- 1 1/4" NPT, 1 5/8"-12 SAE Ports, 1 1/2" NPT
- Element post threads 1 1/2"-16 UNF or 1 1/4" BSP
- Aluminum casting
- Buna Seals
- For use with petroleum based, high water (HWCF) water glycols and water/oil emulsions fluids
- 6 (lbs), 2-2.5 (kgs) shipping weight

Options

- NPT or SAE Ports
- 10, 25, micron cellulose, synthetic elements
- Water absorbing elements
- 100 wire mesh element
- Visual indicators
- 2.5, 5, 15, 25, P.S.I.D., blocked bypass options for return or suction

CP-1280 Series
CP-1580 Series

CPL-1280 Series
CPL-1580 Series

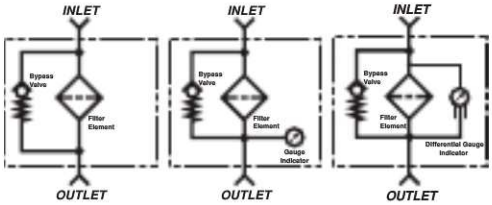

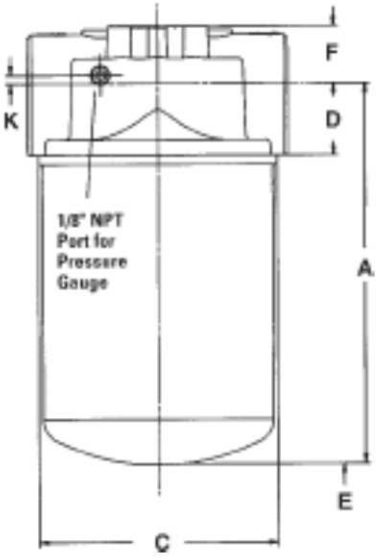

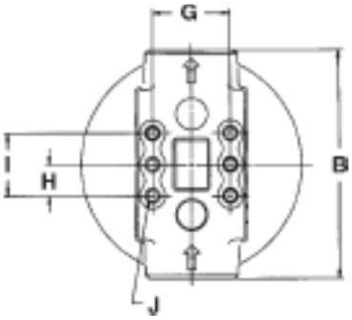

**Head casting has six (6) Mounting Posts with 5/16"-18 threads.

Dimensional Detail

ODEL	PORT		A	B	C	D	E	F	G	H	I	J	K	
CP-1250	1 1/4"	IN MM	8.1 206	5.5 140	5 127	1.5 38	1.2 30	1.2 30	1.9 48	0.8 20	1.5 38	5/16"-18 UNC-2B	0.2 5	EUROPEAN STANDARD
CP-1280 CP-1580	1 1/4" 1 1/2"	IN MM	8.1 206	5.5 140	5 127	1.5 38	1.2 30	1.2 30	1.9 48	0.8 20	1.5 38	5/16"-18 UNC-2B	0.2 5	NORTH AMERICAN
CPL-1280 CPL-1580	1 1/4" 1 1/2"	IN MM	12.2 310	5.5 140	5 127	1.5 38	1.2 30	1.2 30	1.9 48	0.8 20	1.5 38	5/16"-18 UNC-2B	0.2 5	NORTH AMERICAN

CPA, CP have same dimensional detail

Phone: 937/277-9364 FAX: 937/277-6516 www.lenzinc.com

CP-1250, CP-1280

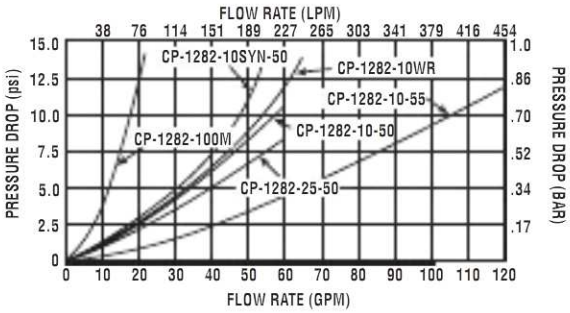

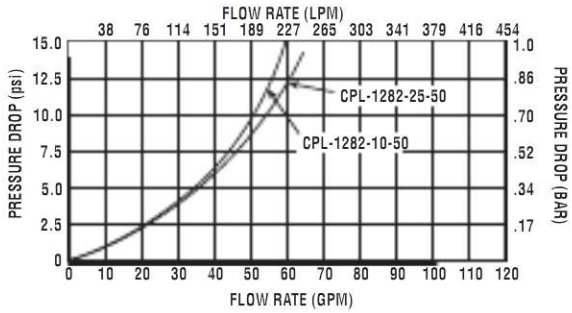

CP-1580

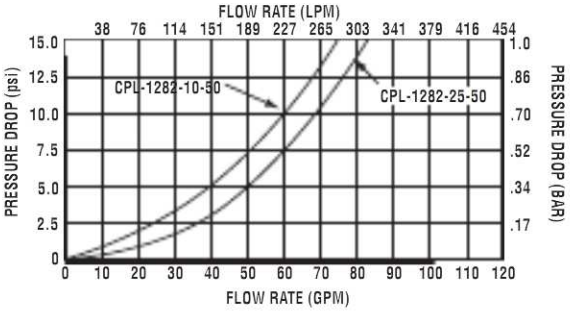

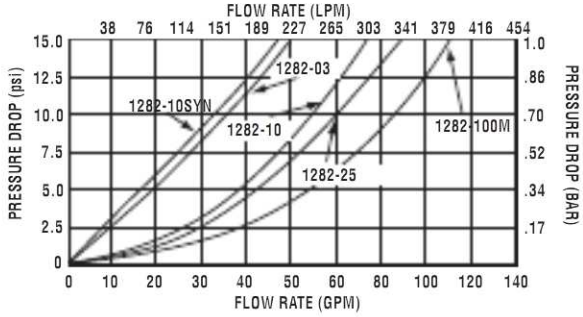

Temperature 100°F Viscosity 150SUS

Average Pressure drop through clean assembly with 150 SUS oil at 100F

Ordering Code

CP — * — 1280 — 10 — R — T — MC-20

SERIES	
CP	NPT
CPA	SAE

MODEL
1280
*1250
*1580

ELEMENT LENGTH	
* OMIT	STD.
L	EXTD.

MEDIA	MODEL	THREAD	LENGTH STD.	LENGTH EXT.
3	3 MIC CELLULOSE 1280, 1580	50	X	X
10	10 MIC CELLULOSE 1250, 1280, 1580	50 or 55	X	
10 SYN	10 MIC SYNTHETIC 1280, 1580	50		
25	25 MIC CELLULOSE 1280, 1580	50	X	X
10WR	10 MIC WATER REMOVAL 1280, 1580	50		
25 SYN	25 MIC SYNTHETIC 1280, 1580	50		
100M	140 MIC SS WIRE MESH 1280, 1580	50		

BYPASS	
P	(15 P.S.I.)
R	(25 P.S.I.)
V	(5 P.S.I.)
H	(2.5 P.S.I.)
B	(NO BYPASS)

IND. PORTS	
OMIT	NONE
T	1/8 NPT RETURN
S	1/8 NPT SUCTION

INDICATING GAUGES	
(T)	MC-12
(T)	MC-20
(T/S)	CP-2
(T)	GLY-MC-20
(S)	135080
(S)	VAC-3-20
	OMIT
	DP-75

**1250 Only standard length*
**1580 Not available in SAE Thread*

Replacement Elements

ODEL NUMBER	MEDIA TYPE	IN	CM	ELEMENT THREAD	RATING B(X)=2/20/75
CP-1282-03-50	3 MICRON CELLULOSE	850	5459	1 1/2"-16 UNF	3u/10u/22u
CP-1282-10-50	10 MICRON CELLULOSE	950	6101	1 1/2"-16 UNF	10u/22u/33u
CPL-1282-10-50	10 MICRON CELLULOSE	1227	7916	1 1/2"-16 UNF	10u/22u/33u
CP-1282-25-50	25 MICRON CELLULOSE	950	6101	1 1/2"-16 UNF	29u/46u/54u
CPL-1282-25-50	25 MICRON CELLULOSE	1227	7916	1 1/2"-16 UNF	29u/46u/54u
CP-1252-10-55	10 MICRON MICRON	946	6076	1 1/4" BSP	9u/22u/24u
CP-1282-10SYN-50	10 MICRON SYNTHETIC	561	3603	1 1/2"-16 UNF	4u/10u/12u
CP-1282-10WR-50	10 MICRON WATER REMOVAL	650	4174	1 1/2"-16 UNF	8u/25u/30u
CP-1282-100M-50	100 SS WIRE MESH	200	1285	1 1/2"-16 UNF	140u

Beta Rating Of 2 = 50% Efficiency
Beta Rating Of 20 = 95% Efficiency
Beta Rating Of 75 = 98.7% Efficiency

Note: 80 P.S.I. Pressure Drop Maximum Without Bypass Valve In Filter Head

For indicator gauge specifications see page 28a

Canister Filters/Disposable Type

Suction or Return Line Application
Model Series-CP (NPT & SAE Ports)
CP-1500, 1520

Specifications
- Working pressure 150 P.S.I. (10 Bar) 80 PSI ΔP w/o bypass
- Operating Temperatures -22° F to +212° F (-32° C to +100° C)
- Flows to 120 GPM (480 LPM) Return
- Flows to 35 GPM (140 LPM) Suction
- Aluminum casting
- Buna Seals
- For use with petroleum based, high water glycols and water/oil emulsions fluids
- Element post threads 1 1/2"-16 UNF or 1 1/4" BSP
- 9-11 (lbs), 4-5 (kgs) shipping weight
- 1 1/2" NPT Ports, 1500 SAE Flange

Options
- 10, 25, 100 micron cellulose, wire mesh & synthetic elements
- Water absorbing elements
- Visual indicators
- 2.5, 5, 15, 25, P.S.I.D., blocked bypass options for suction or return
- 100 wire mesh elements

CP-1500 Series

CP-1520 Series

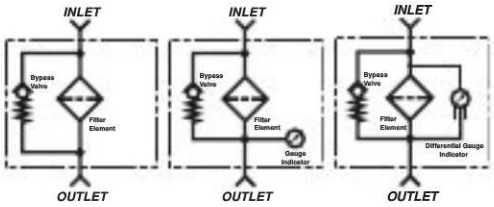

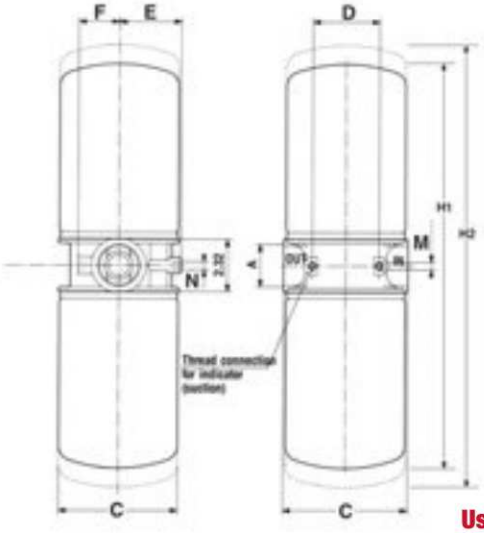

CP-1520 Series

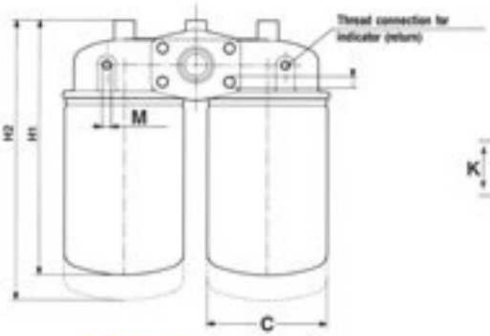

CP-1500 Series

Use LENZ Flange W43-32-32 on CP-1500, CPA-1500 if needed

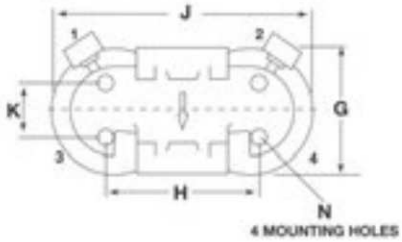

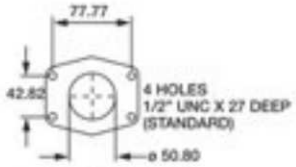

SAE FLANGE DETAILS

Dimensional Detail

MODEL NO.	A		H1	H2	C	D	E	F	G	H	J	K	M	N
CP-1500	1 1/2" NPT, 2" FLANGE	IN	10.00		5.00				6.73	11.26	2.36	1/8 NPT	1/8 NPT	3/8 UNC
CPA-1500	1 7/8"-12 SAE, 2" FLANGE	MM	254		127				171	286	60			
CPL-1500	1 1/2" NPT, 2" FLANGE	IN		14.00	5.00				6.73	11.26	2.36	1/8 NPT	1/8 NPT	3/8 UNC
CPAL-1500	1 7/8"-12 SAE, 2" FLANGE	MM		356	127				171	286	60			
CP-1520	1 1/2" NPT	IN	16.80		5.00	2.56	2.88	2.25					1/8 NPT	3/8 UNC
		MM	427		127	65	73	57						
CPL-1520	1 1/2" NPT	IN		24.80	5.00	2.56	2.88	2.25					1/8 NPT	3/8 UNC
		MM		630	127	65	73	57						

Phone: 937/277-9364 FAX: 937/277-6516 www.lenzinc.com

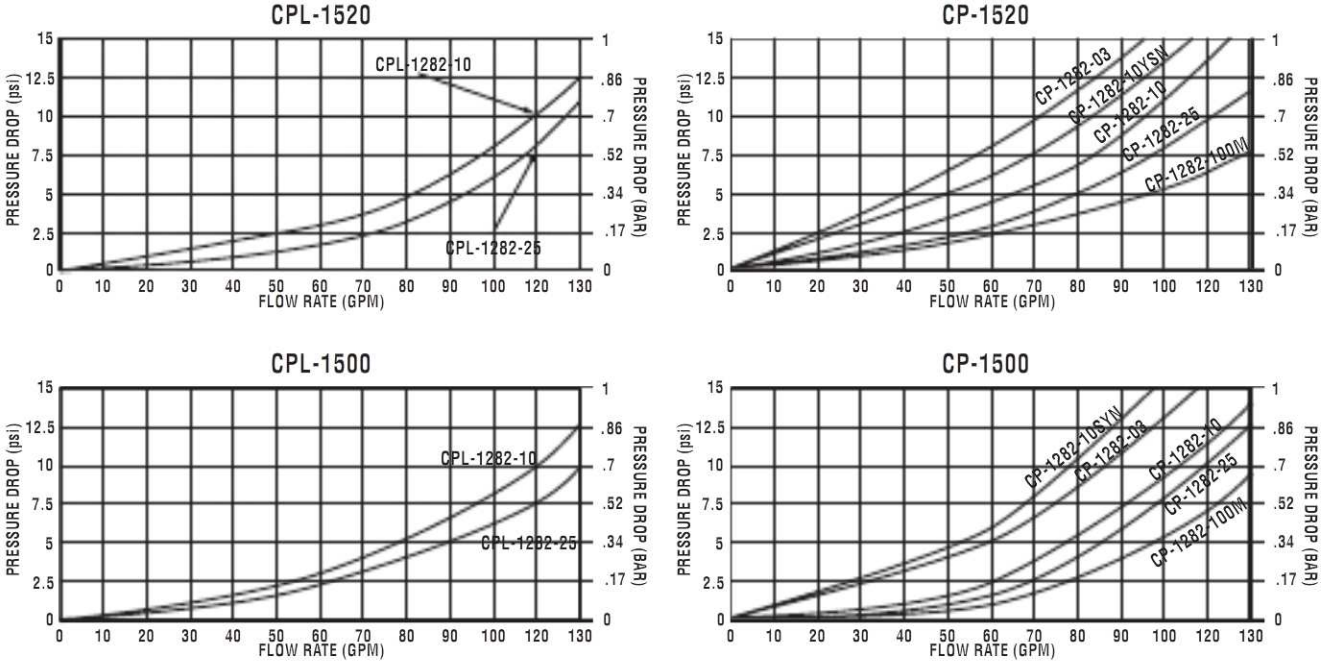

Temperature 100°F Viscosity 150SUS

Average Pressure drop through clean assembly with 150 SUS oil at 100F

Ordering Code

CP — L — 1500 — 10 — R — T — MC-20

SERIES	
CP	NPT
*CPA	SAE

ELEMENT LENGTH	
OMIT	STD.
L	EXTD.

(*Only 1500 Series)

MODEL
1500
1520

MEDIA	LENGTH MODEL	STD	EXT
3	3 MIC CELLULOSE 1280,1580	X	
10	10 MIC CELLULOSE 1250,1280,1580	X	X
10 SYN	10 MIC SYNTHETIC 1280,1580	X	
25	25 MIC CELLULOSE 1280,1580	X	X
10 WR	10 MIC SS WIRE MESH 1280,1580	X	
25 SYN	25 MIC SYNTHETIC 1280,1580	X	
100M	140 MIC SS WIRE MESH 1280, 1580		

BYPASS	
P	(15 P.S.I.)
R	(25 P.S.I.)
V	(5 P.S.I.)
H	(2.5 P.S.I.)
B	(NO BYPASS)

IND. PORTS	
OMIT	NONE
T	1/8 NPT RETURN
S	1/8 NPT SUCTION

INDICATING GAUGES	
(T)	MC-12
(T)	MC-20
(T/S)	CP-2
(T)	GLY-MC-20
(S)	135080
(S)	VAC-3-20
	OMIT

Replacement Elements

MODEL NUMBER	MEDIA TYPE	IN² AREA	CM² AREA	ELEMENT THREAD	RATING B(X)=2/20/75
CP-1282-03-50	3 MICRON CELLULOSE	850	5459	1½"-16 UNF	3u/10u/22u
CP-1282-10-50	10 MICRON CELLULOSE	950	6101	1½"-16 UNF	10u/22u/33u
CPI-1282-10-50	10 MICRON CELLULOSE	1227	7916	1½"-16 UNF	10u/22u/33u
CP-1282-25-50	25 MICRON CELLULOSE	950	6101	1½"-16 UNF	29u/46u/54u
CPI-1282-25-50	25 MICRON CELLULOSE	1227	7916	1½"-16 UNF	29u/46u/54u
CP-1252-10-55	10 MICRON CELLULOSE	946	6076	1¼" BSP	9u/22u/24u
CP-1282-10SYN-50	10 SYNTHETIC	561	3603	1½"-16 UNF	4u/10u/12u
CP-1282-10WR-50	10 WATER REMOVAL	650	4174	1½"-16 UNF	8u/25u/30u
CP-1282-100M-50	100 MICRON SS WIRE MESH	200	1285	1½"-16 UNF	140u

Areas shown are for one element

Beta Rating Of 2 = 50 % Efficiency
Beta Rating Of 20 = 95 % Efficiency
Beta Rating Of 75 = 98.7 % Efficiency

Note: 80 P.S.I. Pressure Drop Maximum Without Bypass Valve In Filter Head

For indicator gauge specifications see page 28a

Medium Pressure In Line Filters Cartridge Type

Suction or Return Line Application
Model DH & DHA (NPT & SAE Ports)

DH-V
Gauge in position for suction line use.

DH-R
Gauge in position for return line use.

Specifications
- Working pressure 350 P.S.I. (24 Bar) 80 PSI ΔP w/o bypass
- Operating Temperatures -22° F to +212° F (-32° C to +100° C)
- Flows to 75 GPM (280 LPM) Return
- 1/2", 3/4", 1", 1 1/4", 1 1/2" Ports
- Cellulose and wire mesh elements
- Aluminum casting
- Buna Seals
- For use with petroleum based, high water glycols and water/oil emulsions fluids
- Aluminum bowl with SAE drain plug
- 2.5 (lbs) 1.1 (kg), 5.5lbs, (2.5 kgs) shipping weight

Options
- NPT or SAE Ports
- 10, 30, micron cellulose, synthetic elements
- 60, 100, 200 Wire Mesh
- Visual indicators
- 5, 15, 25 P.S.I.D., blocked bypass options for return or suction
- Optional Viton, EPR seals

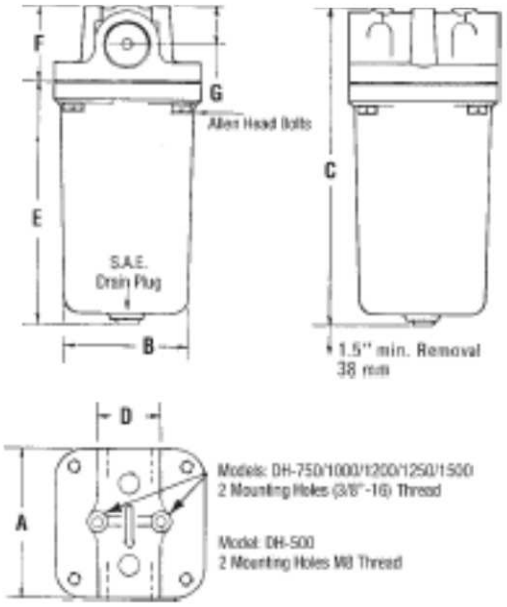

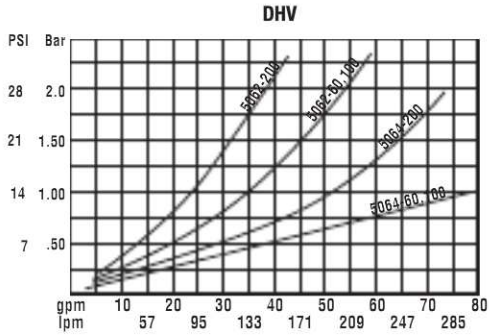

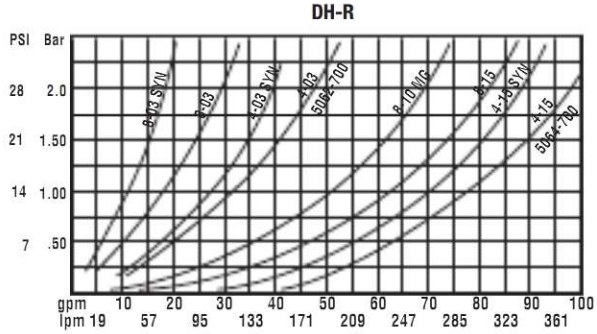

Temperature 100°F Viscosity 150SUS

Average Pressure drop through clean assembly with 150 SUS oil at 100F

Dimensional Detail

MODEL		NPT	SAE	A	B	C	D	E	F	G	WEIGHT
DH-500	IN	1/2"	3/4"-16	3.46	2.60	5.87	1.50	4.13	1.73	0.83	2.3 LBS
	MM			88	66	149	38	105	44	21	0.9 KG
DH-750	IN	3/4"	1 11/16"-12	4.5	3.3	7.4	1.7	5.5	1.9	0.9	2.5 LBS
	MM			114	84	188	44	140	48	23	1.1 KG
DH-1000	IN	1"	1 5/16"-12	4.5	3.3	7.4	1.7	5.5	1.9	0.9	2.5 LBS
	MM			114	84	188	44	140	48	23	1.1KG
DH-1200	IN	1"	1 5/16"-12	5.1	4.7	11.5	2.3	9.1	2.4	1.2	5.5 LBS
	MM			130	119	292	58	231	61	30	2.5 KG
DH-1250	IN	1 1/4"	1 5/8"-12	5.1	4.7	11.5	2.3	9.1	2.4	1.2	5.5 LBS
	MM			130	119	292	58	231	61	30	2.5KG
DH-1500	IN	1 1/2"	1 7/8"-12	5.1	4.7	11.5	2.3	9.1	2.4	1.2	5.5 LBS
	MM			130	119	292	58	231	61	30	2.5KG

D = Center to center mounting

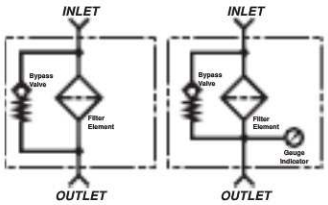

Phone: 937/277-9364 FAX: 937/277-6516 www.lenzinc.com

Ordering Code

DH — 750 — 800 — PR — V — T — CP-2

SERIES	
DH	NPT
DHA	SAE

PORT	
500	1/2"
750	3/4"
1000	1"
1200	1"
1250	1 1/4"
1500	1 1/2"

MEDIA	
800	10 MICRON CELLULOSE
400	30 MICRON CELLULOSE
*500	25 MICRON SYNTHETIC
*300	10 MICRON SYNTHETIC
60	60 S.S. WIRE MESH
100	100 S.S. WIRE MESH
200	200 S.S. WIRE MESH
700	700 S.S. WIRE MESH

BYPASS	
RR	RETURN 25 P.S.I.
PR	RETURN 15 P.S.I.
VR	SUCTION 5 P.S.I.
OMIT No Bypass	

IND. PORTS	
OMIT	NONE
T	1/8 NPT RETURN
S	1/8 NPT SUCTION

SEALS	
OMIT	BUNA
V	VITON
EPR	ETHYLENE PROPYLENE

INDICATING GAUGES	
(T)	MC-12
(T)	MC-20
(T/S)	CP-2
(T)	GLY-MC-20
(S)	135080
(S)	VAC-3-20
	OMIT

** Only Available in DH-750, DH-1000, DH-1200, 1250, 1500 Buna seals standard.*

Replacement Elements

MODEL NO.	SERIES	MEDIA	IN²	CM²	RATING B(X)=2/20/75
5-10	DH-500	10 MICRON CELLULOSE	143	920	10u/25u/32
5-25	DH-500	25 MICRON CELLULOSE	143	920	43u/46V54
8-03	DH-750, 1000	10 MICRON CELLULOSE	342	2206	10u/25u/32u
8-03 SYN	DH-750, 1000	10 MICRON SYNTHETIC	94	590	4u/10u/12u
4-03	DH-750, 1000	30 MICRON CELLULOSE	342	2206	43u/46u/54u
4-03 SYN	DH-750, 1000	25 MICRON SYNTHETIC	94	590	7u/16u/23u
8-15	DH-1200, 1250, 1500	10 MICRON CELLULOSE	1122	7237	10u/25u/32u
8-10MG	DH-1200, 1250, 1500	10 MICRON SYNTHETIC	660	4528	3u/10u/12u
4-15	DH-1200, 1250, 1500	30 MICRON CELLULOSE	1122	7237	43u/46u/54u
4-15 SYN	DH-1200, 1250, 1500	25 MICRON SYNTHETIC	302	1900	7u/16u/23u
5061-100	DH-500	100 SS MESH	48	315	141
5061-200	DH-500	200 SS MESH	48	315	74
5062-200	DH-750, 1000	200 S.S. WIRE MESH	120	774	74u
5062-100	DH-750, 1000	100 S.S. WIRE MESH	120	774	140u
5062-700	DH-750, 1000	700 S.S. WIRE MESH	120	774	10u
5062-60	DH-750, 1000	60 S.S. WIRE MESH	120	774	262u
5064-200	DH-1200, 1250, 1500	200 S.S. WIRE MESH	325	2096	74u
5064-60	DH-1200, 1250, 1500	60 S.S. WIRE MESH	325	2096	262u
5064-100	DH-1200, 1250, 1500	100 S.S. WIRE MESH	325	2096	144u
5064-700	DH-1200, 1250, 1500	700 S.S. WIRE MESH	325	2096	25u

DH-500R

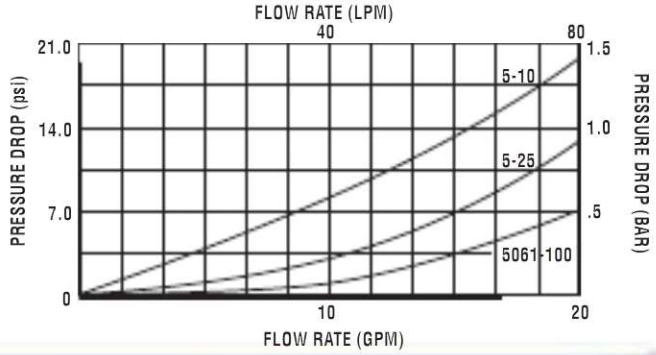

In-Tank Filters
Disposable Filter Cartridge Type

Return Line Application

Model "LIT" Series LIT-500, 750, 1000, 1250

Specifications

- Working pressure 100 P.S.I. (7 Bar)
- Operating Temperatures -22° F to +212° F (-32° C to +100° C)
- Flows to 55 GPM (208 LPM) Return
- 1/2", 3/4", 1", 1 1/4", Ports Aluminum casting
- Buna Seals
- For use with petroleum based, high water - (HWCF) water glycols and water/oil emulsions fluids
- Nylon bowl
- 3-10 (lbs), 1.4-4.5 (kgs) shipping weight
- 25 P.S.I.D. bypass option for return
- LIT 500, 750, 1000 have magnet on lid

Options

- NPT or SAE Ports
- 10, 25 micron cellulose, synthetic elements
- Water absorbing elements (Series 1250 only)
- Visual indicators
- 140 Micron Wire Mesh elements (Series 1250 only)
- Dual ports available on 1250 Series
- Weld Riser Available for LIT-1250 Series

(see Tech Bulletin: TB.FIL.06.708)

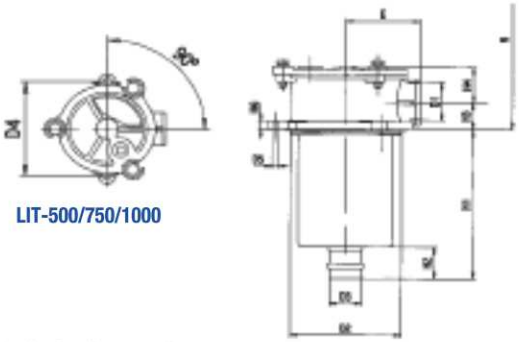

LIT-500/750/1000

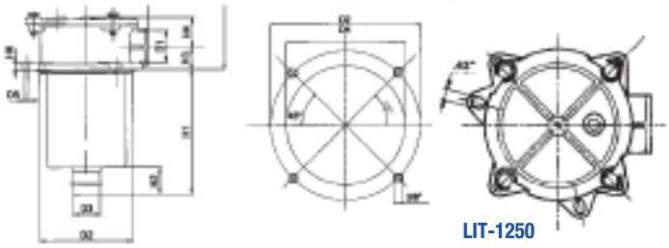

LIT-1250

DUAL-LIT-1250

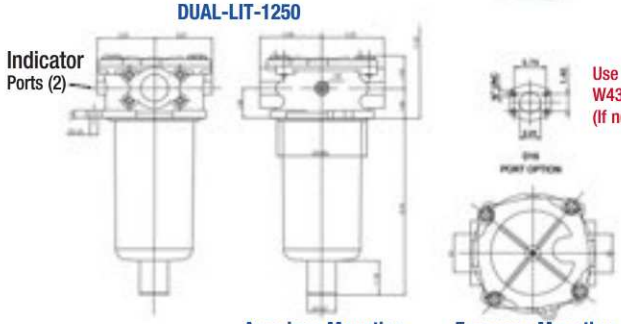

American Mounting

European Mounting

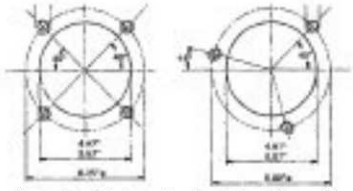

The mounting flange has 6 holes, allowing choice of mounting configurations:
Four mounting holes on 6.25" bolt circle (American Standard)
Three mounting holes on 6.88" bolt circle (European Standard)
(LIT-1250 / DUAL-LIT-1250)

Dimensional Detail

MODEL NUMBER	PORT D1 NPT, SAE		D2	D3	D4	D5	E	H1	H2	H3	H4	H6	REMOVAL R
LIT 500	1/2 NPT	IN	3.50	0.75	3.54	0.28	2.09	3.50	0.59	0.94	1.06	0.31	5.19
	3/4-16 SAE	MM	89	19	90	7	53	89	15	24	27	7.8	132
LITS 750	3/4	IN	4.09	0.87	4.53	0.33	2.56	4.09	0.98	1.10	1.42	0.35	5.91
	1 1/16	MM	104	22	115	8.5	65	104	25	28	36	9	150
LIT-750	3/4, 1 NPT	IN	4.09	0.87	4.53	0.33	2.56	6.02	0.98	1.10	1.42	0.35	7.48
LIT-1000	1 1/16, 1 5/16-12	MM	104	22	115	8.5	65	153	25	28	36	9	190
LITXL 1000	1 NPT	IN	4.09	0.87	4.53	0.33	2.56	8.70	0.98	1.10	1.42	0.35	9.17
	1 5/16-12	MM	104	22	115	8.5	65	221	25	28	36	9	233
LIT 1250	1 1/4 NPT	IN	5.12	1.58	6.89	0.41	3.73	9.76	1.97	1.38	2.21	0.51	11.60
LITA-1250	1 5/8-12 SAE	MM	130	40.1	175	10.4	94.7	247.9	50	35	56	12.9	294.6
DUAL-LIT-1250													

Phone: 937/277-9364 FAX: 937/277-6516 www.lenzinc.com

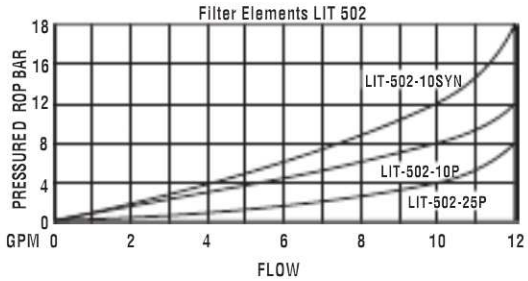

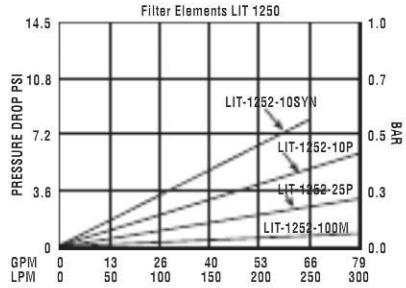

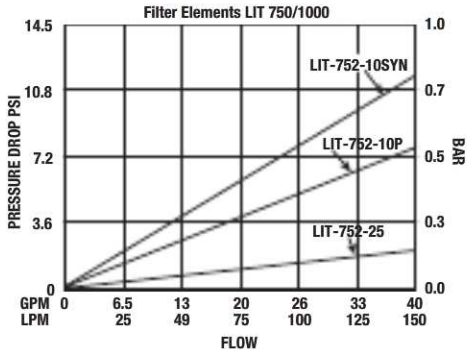

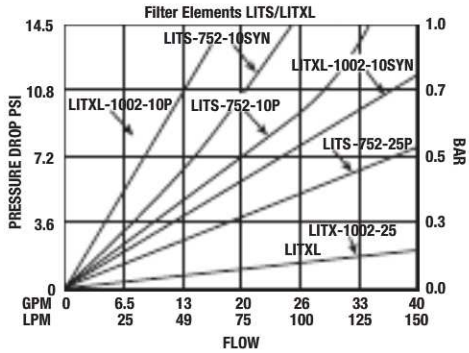

Temperature 100°F Viscosity 150SUS

Average Pressure drop through clean assembly with 150 SUS oil at 100F

Ordering Code

LIT — 1250 — 10 — P — T — MC-20

SERIES	
LIT	NPT
LITA	SAE
DUAL-LIT	NPT (1250 only)
LITS	SHORT (750 only)
LITXL	LONG (1000 only)

MODEL	PORT SIZE
500	1/2"
750	3/4"
1000	1"
1250	1 1/4"

EDIA	MODEL	
10	10 MIC CELLULOSE	ALL
10SYN	10 MIC SYNTHETIC	ALL
10WR	10 MIC WATER ABSORPTION	1250
25	25 MIC CELLULOSE	ALL
100M	140 MIC SS WIRE MESH	1250

BYPASS	
P	(25 P.S.I.)

IND. PORTS	
OMIT	NONE
T	1/8 NPT RETURN

INDICATING GAUGES	
(T)	MC-20
(T)	CP-2
(T)	GLY-MC-20
	OMIT

NOTE: Indicators Page 28a

Replacement Elements

MODEL NUMBER	MEDIA	IN	CM	B=2/20/75
LIT502-10P	10 MICRON CELLULOSE	110	710	6µ/8µ/13µ
LIT502-25P	25 MICRON CELLULOSE	110	710	24µ/35µ/43µ
LIT502-10SYN	10 MICRON SYNTHETIC	78	500	3µ/5.5µ/12µ
LITS-752-10P	10 MICRON CELLULOSE	190	1225	6µ/8µ/13µ
LITS-752-25P	25 MICRON CELLULOSE	190	1225	24µ/35µ/43µ
LITS-752-10SYN	10 MICRON SYNTHETIC	136	875	3µ/5.5µ/12µ
LIT-752-10P	10 MICRON CELLULOSE	380	2450	6µ/8µ/13µ
LIT-752-25P	25 MICRON CELLULOSE	380	2450	24µ/35µ/43µ
LIT-752-10SYN	10 MICRON SYNTHETIC	271	1750	3µ/5.5µ/12µ
LITXL-1002-10P	10 MICRON CELLULOSE	620	4000	6µ/8µ/13µ
LITXL-1002-25P	25 MICRON CELLULOSE	620	4000	24µ/35µ/43µ
LITXL-1002-10SYN	10 MICRON SYNTHETIC	450	2900	3µ/5.5µ/12µ
LIT-1250-10P	10 MICRON CELLULOSE	1120	7220	6µ/8µ/13µ
LIT-1250-25P	25 MICRON CELLULOSE	1120	7220	24µ/35µ/43µ
LIT-1250-10SYN	10 MICRON SYNTHETIC	1120	7220	3µ/5.5µ/12µ
LIT-1250-100WR	10 MICRON WATER REMOVAL	452	2916	10µ/18µ
LIT-1250-100M	140 MICRON WIRE MESH	310	1991	140µ

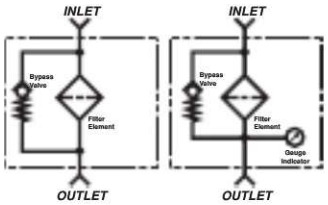

LIT-1252 Elements meet HF 4 Specifications

For indicator gauge specifications see page 28a

In-Tank Filters
Disposable Filter Cartridge Type

Return Line Application
Series LITA-1010

Specifications
- Working pressure 100 PSI (7 Bar)
- Operating Temperatures -22° F to +212° F (-32° C to +100° C)
- Flows to 40 GPM (160 LPM) Return
- 1" Port Aluminum casting
- Buna Seals
- For use with petroleum based, high water water glycols and water/oil emulsions fluids
- Nylon bowl
- 3 (lbs), 1.4 (kgs) shipping weight

Options
- 1" NPT Ports
- 10, 25 micron cellulose, synthetic elements
- 25" PSI bypass
- Visual Indicator

LITA-1010 Series *LIT-1012*

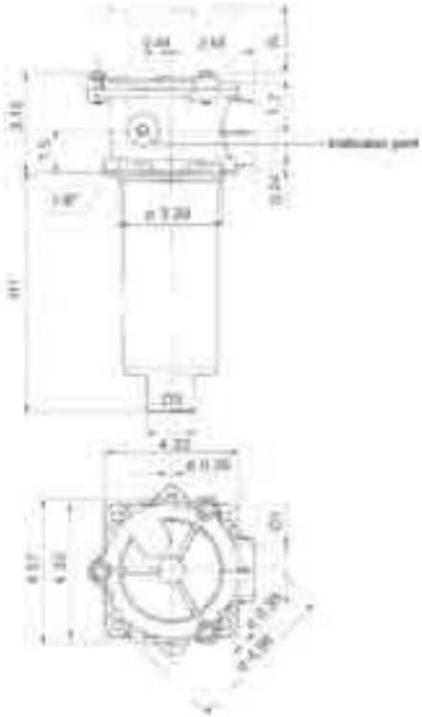

Dimensional Detail

Model Number	D1	Tank Hole	D3	H1	Element Replacement	Weight Lbs
LITA-1010	1 5/16"-12 SAE	3.5	1.6	9.3	11.2	2.8

R= Element removal clearance 11.2"

Ordering Code

LITA — 1010 — 10 — P — MC-20

SERIES	PORT TYPE
LITA	SAE
LIT	NPT

MODEL
1010

MEDIA	MODEL
10	10 MICRON
10 SYN	10 MICRON
30	25 MICRON

BYPASS
R (25 P.S.I.)

IND	
MC-20	
CP-2	
GLY-MC-20	
OMIT	
T	RETURN PORTS ONLY

For indicator gauge specifications see page 28a

PRESSURE DROP (Δp) CURVES

The "Assembly Pressure Drop (Δp): is obtained by adding the pressure drop values of the Filter Housing and of the Clean Filter Element corresponding to the considered Flow Rate and it must be lower than 70 psi (0.5 bar).

FILTER HOUSING PRESSURE DROP

(mainly depending on the port size)

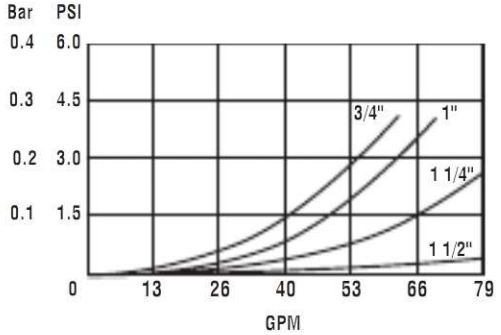

CLEAN FILTER ELEMENT PRESSURE DROP

(depending both on the internal diameter of the element and on the filter media)

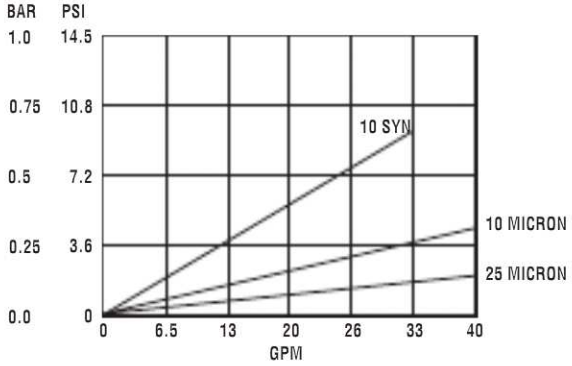

BYPASS VALVE PRESSURE DROP

When selecting the filter size, these curves must be taken into account if it is foreseen that any flow peak is to be absorbed by the bypass valve, is also must be of proper configuration to avoid pressure peaks. The valve pressure drop is directly proportional to fluid specific gravity.

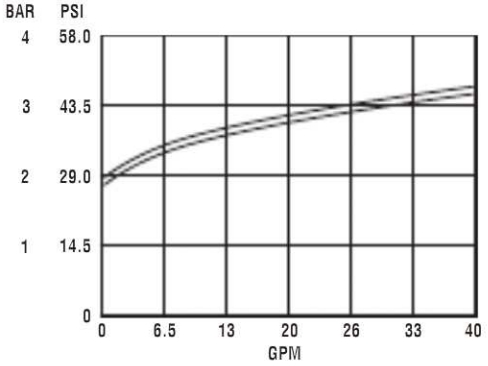

N.B. All the curves are obtained from test done at the Laboratory, according to the specification ISO 3968. In case of discrepancy, please check the contamination level, viscosity and features of the fluid in use.

Dimensional Detail

Element	A	B	S	Area In.
LIT-1012-10SYN	2.76	1.57	8.27	65.4
LIT-1012-10	2.76	1.57	8.27	105
LIT-1012-25	2.76	1.57	8.27	105

In-Tank Filters
Disposable Filter Cartridge Type
Return Line Application
Model "RTF" 500,750,1000, 1250

RTF-500, 750, 1000, 1250 | *DUAL RTF-1000, 1250* | *LIT-1252*

Specifications

- Working pressure 150 PSI (10 bar)
- Operating temperatures -22F to +212 F (-32C to +100 C)
- Flows to 46 GPM, (175 LPM)
- Bypass 15 PSI (1 bar)
- For use with petroleum based
- aluminum casting

Options

- NPT or SAE ports
- 10, 25 micron cellulose, synthetic elements
- Dual port filter
- Visual indicators

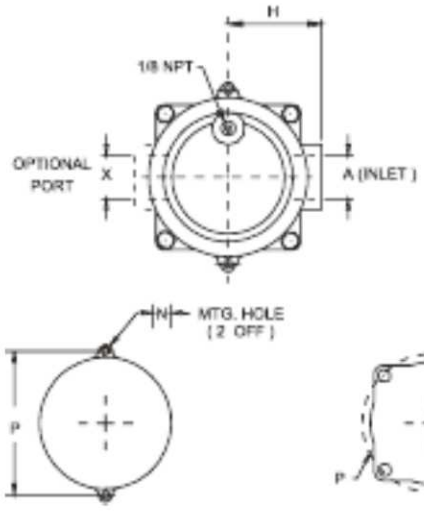

RTF - 500
RTF - 750
RTF - 1000

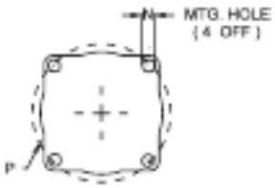

RTF - 1250

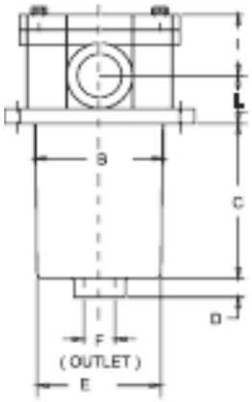

Dimensional Details

MODEL	PORT A	PORT X		B	C	D	E	PORT F	H	I	L	N	P	WEIGHT
RTF-500	1/2" NPT	N/A	IN	2.5	2.4	0.6	2.4	1/2" NPT	2.0	1.1	0.9	0.3	3.5	2
			MM	64	60	15	62		51	28	24	6.6	90	
RTF-750	3/4" NPT	N/A	IN	3.4	3.0	0.6	3.2	3/4" NPT	2.7	1.3	1.0	0.3	4.5	3.5
			MM	86	75	15	81		69	34	26	8.2	114	
RTF-1000	1" NPT	N/A	IN	3.4	4.1	0.6	3.2	3/4" NPT	2.7	1.5	1.3	0.3	4.5	4
			MM	86	104	15	81		68	37	32	8.4	114	
DUAL-RTF-1000	1" NPT	3/4" NPT	IN	3.4	4.1	0.6	3.2	3/4" NPT	2.7	1.5	1.3	0.3	4.5	4
			MM	86	104	15	81		68	37	32	8.2	114	
RTF-1250	1 1/4" NPT	N/A	IN	5.1	8.5	0.8	4.8	1 1/4" NPT	3.5	2.2	1.7	0.4	6.9	9
			MM	129	215	20	122		88	56	44	10.5	175	
DUAL-RTF-1250	1 1/4" NPT	1 1/4" NPT	IN	5.1	8.5	0.8	4.8	1 1/4" NPT	3.5	2.2	1.7	0.4	6.9	9
			MM	129	215	20	122		88	56	44	10.5	175	

SAE PORTS AVAILABLE IN QUANITIES 25+

Phone: 937/277-9364 FAX: 937/277-6516 www.lenzinc.com

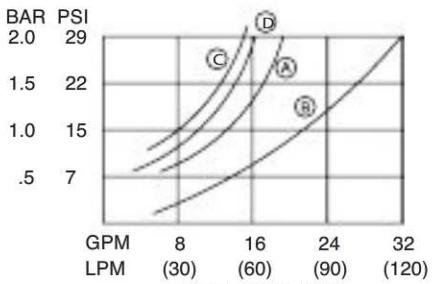

RTF - 500, 750

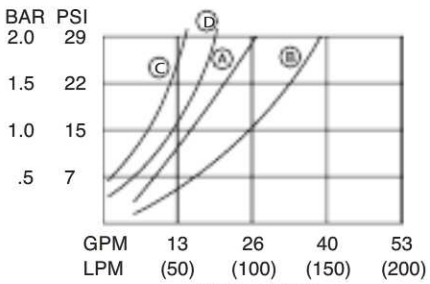

RTF - 1000
Dual-RTF - 1000

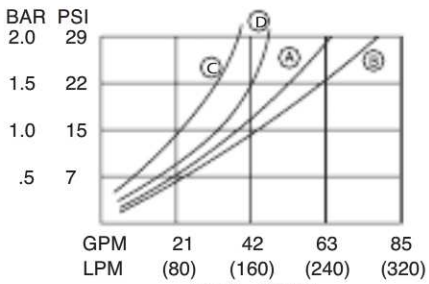

RTF - 1250
Dual-RTF - 1250

Ⓐ 10 Micron Ⓑ 25 Micron Ⓒ 10 Micron Synthetic Ⓓ 25 Micron Synthetic

Ordering Code

RTF — 500— 10 — P — T — CP-2

SERIES
RTF
DUAL-RTF

MODEL	PORT SIZE
500	1/2" PORT
750	3/4" PORT
1000	1" PORT
1250	1 1/4" PORT

MEDIA	
10	10 MICRON CELLULOSE
25	25 MICRON CELLULOSE
10SYN	10 MICRON SYNTHETIC
25SYN	25 MICRON SYNTHETIC

BYPASS	
P	(15 PSI)
*R	(25 PSI)

*RTF-1250 Only

IND PORTS
OMIT NONE
T 1/8" NPT

INDICATORS
MC-12
CP-2

DUAL PORT "X" AVAILABLE ON RTF 1000, 1250 ONLY

Replacement Elements

MODEL NUMBER	MEDIA	IN²	CM²	B(X)=2/20/75
LIT-502-10P	10 MICRON CELLULOSE	110	710	6µ/8µ/13µ
LIT-502-25P	25 MICRON CELLULOSE	110	710	24µ/35µ/43µ
LIT-502-10SYN	10 MICRON SYNTHETIC	78	500	3µ/5.5µ/12µ
LIT-502-25SYN	25 MICRON SYNTHETIC	78	500	7µ/16µ/23µ
TIE-752-10P	10 MICRON CELLULOSE	190	1225	6µ/8µ/13µ
TIE-752-25P	25 MICRON CELLULOSE	190	1225	24µ/35µ/43µ
TIE-752-10SYN	10 MICRON SYNTHETIC	136	875	3µ/5.5µ/12µ
TIE-752-25SYN	25 MICRON SYNTHETIC	136	875	7µ/16µ/23µ
LIT-752-10P	10 MICRON CELLULOSE	380	2450	6µ/8µ/13µ
LIT-752-25P	25 MICRON CELLULOSE	380	2450	24µ/35µ/43µ
LIT-752-10SYN	10 MICRON SYNTHETIC	271	1750	3µ/5.5µ/12µ
LIT-752-25SYN	25 MICRON SYNTHETIC	271	1750	7µ/16µ/23µ
LIT-1252-10P	10 MICRON CELLULOSE	1120	7220	6µ/8µ/13µ
LIT-1252-25P	25 MICRON CELLULOSE	1120	7220	24µ/35µ/43µ
LIT-1252-10SYN	10 MICRON SYNTHETIC	1120	7220	3µ/5.5µ/12µ
LIT-1252-10WR	10 MICRON WATER ABSORPTION	452	2916	10µ/18µ
LIT-1252-100M	100 MESH SS WIRE MESH	310	1991	140µ

LIT-752 elements fit RTF-1000 Filters
LIT-1252 elements fit RTF-1250 Filters

For indicator gauge specifications see page 28a

In-Tank Filters
Disposable Filter Cartridge Type
Return Line Application
Model "LFT, LFTA"-750, 1000, 1250

LFT-1250 LFTE

Specifications
- Working pressure 100 PSI (7 bar)
- Operating temperatures -22F to +212 F (-32C to +100 C)
- Flows to 40 GPM
- Bypass 15 PSI
- For use with petroleum based fluids
- Aluminum casting with nylon filter bowl

Options
- NPT or SAE ports
- 10, 25 micron cellulose, synthetic elements
- Visual indicators

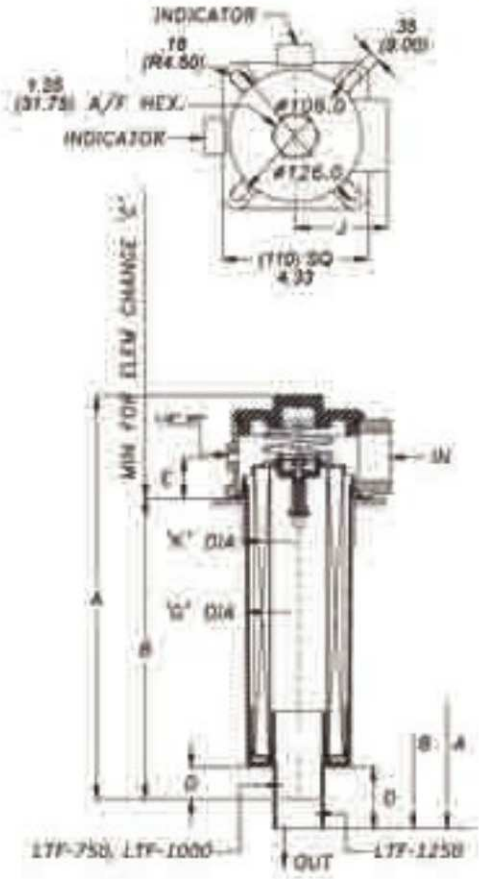

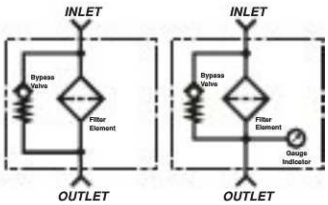

MODEL	PORT INLET		A	B	C	D	E	G	H	J	K
LFT-750	3/4" NPT	IN	12.1	9.1	13.8	0.9	1.2	3.1	1.5	2.6	3.14/+.1
LFTA-750	1 1/16"-12 SAE	MM	307	230	350	24	30	80	38	66	80.00/+2.8
LFT-1000	1" NPT	IN	12.1	9.1	13.8	0.9	1.2	3.1	1.5	2.6	3.14/+.1
LFTA-1000	1 5/16"-12 SAE	MM	307	230	350	24	30	80	38	66	80.00/+2.8
LFT-1250	1 1/4" NPT	IN	15.4	12.2	15.9	0.9	1.2	3.1	1.5	2.6	3.14/+.1
LFTA-1250	1 5/8"-12 SAE	MM	390	311	405	24	30	80	38	66	80.00/+2.8

Phone: 937/277-9364 FAX: 937/277-6516 www.lenzinc.com

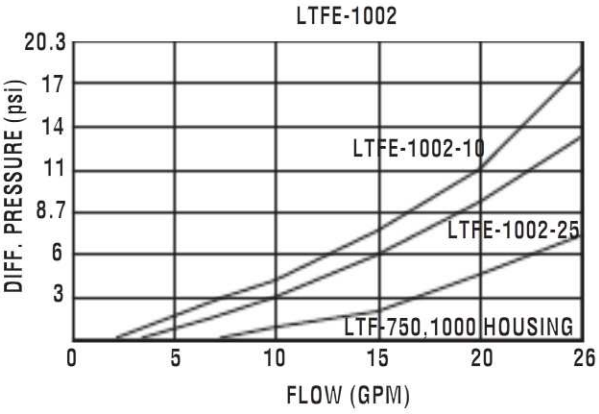

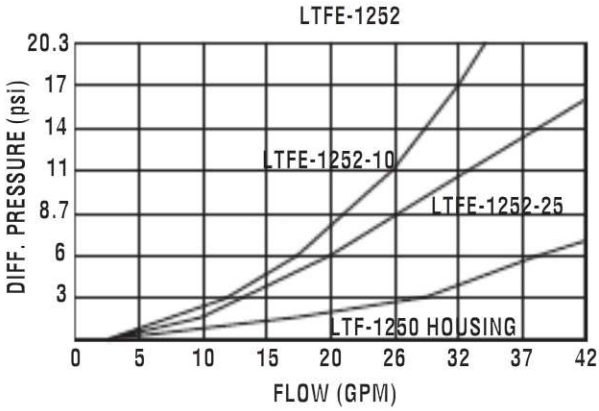

Ordering Code

LFT — 750— 10 — L1 — T — CP-2

SERIES	
LFT	(NPT)
LFTA	(SAE)

PORT SIZE	
750	3/4"
1000	1"
1250	1 1/4"

ELEMENT	
10	10 MICRON CELLULOSE
25	25 MICRON CELLULOSE
10SYN	10 MICRON SYNTHETIC
25SYN	25 MICRON SYNTHETIC

BOWL LENGTH	
L1	750, 1000
L2	1250

IND. PORTS	
OMIT	NONE
T	1/8 NPT RETURN

INDICATING GAUGES	
(T)	MC-12
(T)	CP-2

Replacement Elements

MODEL NUMBER	MEDIA	IN	CM	B-20/75/200
LFTE-1002-L1-10	10 MICRON CELLULOSE	511	3300	6µ/8µ/13µ
LFTE-1002-LI-25	25 MICRON CELLULOSE	511	3300	25µ/35µ/43µ
LFTE-1002-L1-10SYN	10 MICRON SYNTHETIC	372	2400	3µ/5.5µ/12µ
LFTE-1002-L1-25SYN	25 MICRON SYNTHETIC	372	2400	7/µ/16µ/23µ
LFTE-1252-L2-10	10 MICRON CELLULOSE	698	4500	6µ/8µ/13µ
LFTE-1252-L2-25	25 MICRON CELLULOSE	698	4500	25µ/35µ/43µ
LFTE-1252-L2-10SYN	10 MICRON SYNTHETIC	504	3250	3µ/5.5µ/12µ
LFTE-1252-L2-25SYN	25 MICRON SYNTHETIC	504	3250	7/µ/16µ/23µ

For indicator gauge specifications see page 28a

In-Tank Filters In-to-Out Flow
Disposable Filter Cartridge Type

Return Line Application
Model "TFR" 750, 1000, 1200, 1250, 1500, 2000

- Working pressure 150 PSI (10 bar)
- Operating temperatures -22F to +212 F (-32C to +100 C)
- Flows to 120 GPM, (450 LPM)
- Bypass 25 PSI
- For use with petroleum based, water glycols and water/oil emulsion fluids
- Aluminum casting
- Magnetic Core
- Diffuser Tube

Options

- NPT or SAE ports
- 10,25 micron cellulose, synthetic elements
- 15, 45 PSID bypass
- Visual indicators

TFR1E

TFR-1
Less Diffuser

TFR-2
with Magnet & Diffuser

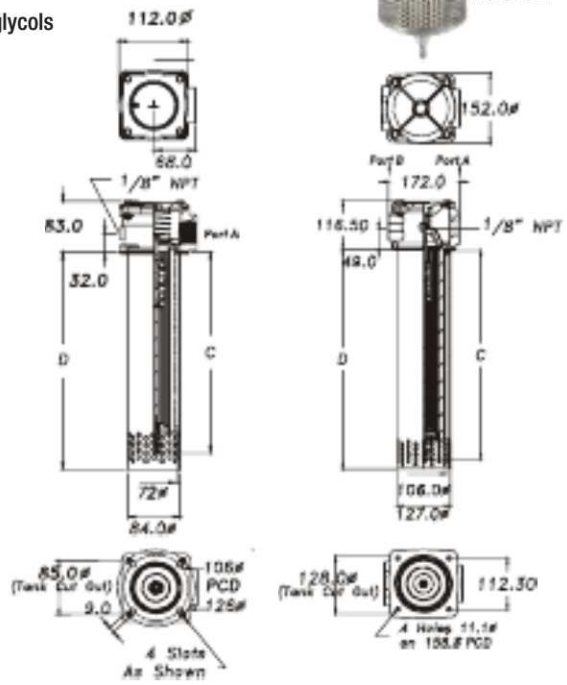

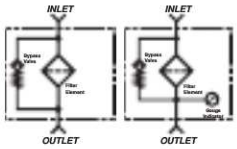

TFR-1 Element Length

MODEL NO		C	D
TFR-1-L1	IN	7.1	7.9
TRFA-1-L1	MM	180	200
TFR-1-L2	IN	9.1	9.8
TFRA-1-L2	MM	230	250
TFR-1-L3	IN	13.0	13.8
TFRA-1-L3	MM	330	350

TFR-2 Element Length

MODEL NO		C	D
TFR-2-L4	IN	9.3	10.0
TFRA-2-L4	MM	235	255
TFR-2-L5	IN	11.8	12.6
TFRA-2-L5	MM	300	320
TFR-2-L6	IN	19.9	20.7
TFRA-2-L6	MM	505	525

Ordering Code

TFR — 2 — 1000 — 10 — L2 — R — LD — T

SERIES
TFR
TFRA

MODEL
1
2

PORT	SIZE
750	3/4
1000	1
1200	1 1/4
1250	1 1/4
1500	1 1/2
2000	2

MICRON	
10	10 MICRON CELLULOSE
25	25 MICRON CELLULOSE
10SYN	10 MICRON SYNTHETIC
25SYN	25 MICRON SYNTHETIC

BOWL LENGTH	BOWL MODEL
L1	TFR1
L2	TFR1
L3	TFR1
L4	TFR2
L5	TRF2
L6	TFR2

BYPASS	
P	15 PSI BYPASS
R	25 PSI BYPASS
W	50 PSI BYPASS

OPTIONS	
OMIT	NONE
LMC	LESS MAGNET
LD	LESS DIFFUSER

INDICATORS	
(P)	MC-12
(R)	MC-20
T	PLUGGED
(W)	LZ-100-15RC

For indicator gauge specifications see page 28a

Phone: 937/277-9364 FAX: 937/277-6516 www.lenzinc.com

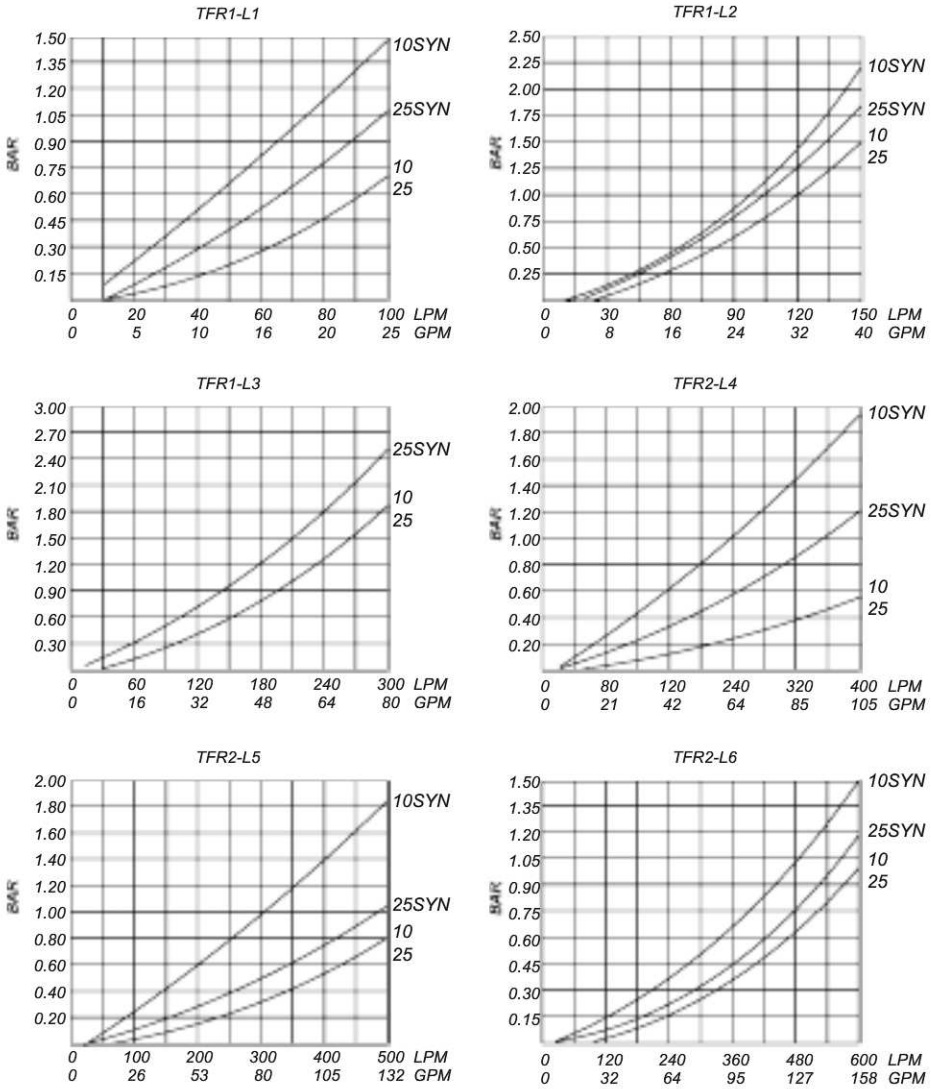

Replacement Elements

MODEL NUMBER	MEDIA	IN	CM	B= 2/20/75
TFR1E-L1-10	10 MICRON CELLULOSE	279	1800	6µ/8µ/13µ
TFR1E-L1-25	25 MICRON CELLULOSE	279	1800	24µ/35µ/43µ
TFR1E-L1-10SYN	10 MICRON SYNTHETIC	190	1225	3µ/5.5µ/12µ
TFR1E-L1-25SYN	25 MICRON SYNTHETIC	190	1225	7µ/16µ/23µ
TFR1E-L2-10	10 MICRON CELLULOSE	403	2600	6µ/8µ/13µ
TFR1E-L2-25	25 MICRON CELLULOSE	403	2600	24µ/35µ/43µ
TFR1E-L2-10SYN	10 MICRON SYNTHETIC	264	1700	3µ/5.5µ/12µ
TFR1E-L2-25SYN	25 MICRON SYNTHETIC	264	1700	7µ/16µ/23µ
TFR1E-L3-10	10 MICRON CELLULOSE	589	3800	6µ/8µ/13µ
TFR1E-L3-25	25 MICRON CELLULOSE	589	3800	24µ/35µ/43µ
TFR1E-L3-10SYN	10 MICRON SYNTHETIC	407	2625	3µ/5.5µ/12µ
TFR1E-L3-25SYN	25 MICRON SYNTHETIC	407	2625	7µ/16µ/23µ
TFR2E-L4-10	10 MICRON CELLULOSE	496	3200	6µ/8µ/13µ
TFR2E-L4-25	25 MICRON CELLULOSE	496	3200	24µ/35µ/43µ
TFR2E-L4-10SYN	10 MICRON SYNTHETIC	419	2700	3µ/5.5µ/12µ
TFR2E-L4-25SYN	25 MICRON SYNTHETIC	419	2700	7µ/16µ/23µ
TFR2E-L5-10	10 MICRON CELLULOSE	713	4600	6µ/8µ/13µ
TFR2E-L5-25	25 MICRON CELLULOSE	713	4600	24µ/35µ/43µ
TFR2E-L5-10SYN	10 MICRON SYNTHETIC	574	3700	3µ/5.5µ/12µ
TFR2E-L5-25SYN	25 MICRON SYNTHETIC	574	3700	7µ/16µ/23µ
TFR2E-L6-10	10 MICRON CELLULOSE	1054	6800	6µ/8µ/13µ
TFR2E-L6-25	25 MICRON CELLULOSE	1054	6800	24µ/35µ/43µ
TFR2E-L6-10SYN	10 MICRON SYNTHETIC	837	5400	3µ/5.5µ/12µ
TFR2E-L6-25SYN	25 MICRON SYNTHETIC	837	5400	7µ/16µ /23µ

For 25 Micron Synthetic, 74 Micron Mesh, replacement elements consult factory

LITB In-Tank Filter / Breather

LITB-20, 40

Specifications

- Working pressure 150 P.S.I. (7 Bar)
- Operating Temperatures -22° F to +212° F (-32° C to +100° C)
- Flows to 40 GPM (150 LPM) Return
- 1/2", 3/4", 1" Ports
- 10 or 40 micron breathers
- Aluminum casting, nylon lid
- Buna Seals
- For use with petroleum based, high water glycols and water/oil emulsions fluids
- Three nylon bowl lengths
- 3-10 (lbs.) , 1.4 - 4.5 (kgs.) shipping weight
- 25 P.S.I.D. bypass for return

Options

- NPT or SAE Ports
- 6, 10, 25 micron cellulose, synthetic elements
- Visual indicators
- Dipsticks available

LITB-20 Series

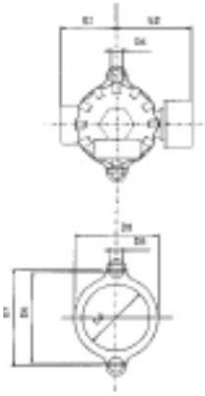

LITB-20, 40 Series

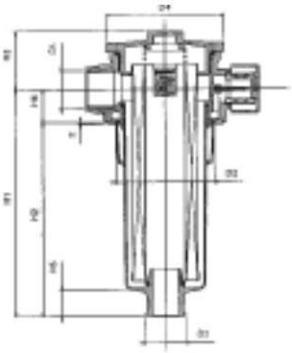

LITB-40 Series

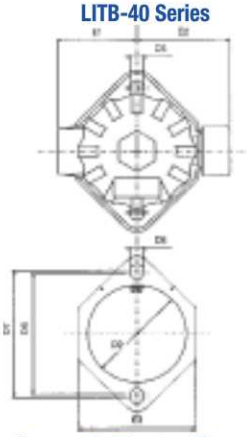

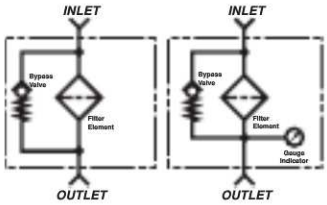

Dimensional Details

MODEL NUMBER	D1		D2	D3	D4	D5	D6	D7	D8	H1	H2	H3	H4	H5	E1	E2	E3	WEIGHT LB/KG
LITB 20	1/2", 3/4"	IN	2.3-2.5	1.1	3	0.4	3.2	3.5	3	8	7	1.6	0.9	0.6	2	2.8		0.85
		MM	60-63	28	75	11	82	88	77	202	178	41	24	16	50	70		0.4
LITB 40	3/4", 1"	IN	3.4-3.6	1.4	4.1	0.4	4.3	4.5		5.5	4.3	2.4	1.2	0.9	2.8	3.3	4.1	4.5
		MM	87-91	36	104	11	110	115		140	110	60	30	22	70	83	103	2
LITB 40	3/4", 1"	IN	3.4-3.6	1.4	4.1	0.4	4.3	4.5		8.1	6.9	2.4	1.2	0.9	2.8	3.3	4.1	4.5
		MM	87-91	36	104	11	110	115		205	175	60	30	22	70	83	103	2
LITB 40	3/4", 1"	IN	3.4-3.6	1.4	4.1	0.4	4.3	4.5		12	10.8	2.4	1.2	0.9	2.8	3.3	4.1	4.5
		MM	87-91	36	104	11	110	115		305	275	60	30	22	70	83	103	2

Ordering Code

LITB-20 — 500 — 10 — 40 — D — T — MC-20

SERIES
LITB 20
LITBA 20

PORT SIZE	
500	1/2"
750	3/4"

MEDIA	
10	10 MICRON CELLULOSE
10 SYN	10 MICRON SYNTHETIC
6SYN	6 MICRON SYNTHETIC
25	25 MICRON CELLULOSE
25SYN	25 MICRON SYNTHETIC

BREATHER	
10	10 MICRON
40	40 MICRON

OPTIONS	
D	DIPSTICK
	OMIT

IND. PORTS	
OMIT	NONE
T	1/8 NPT RETURN

INDICATING GAUGES	
(T)	MC-20
(T)	CP-2

NOTE: Indicators Page 28a

Replacement Elements

ELEMENT	AREA MEDIA	AREA IN	CM	BETA	RATIO
LITE20-10P	10 MIC. CELLULOSE	135	870	B10	2
LITE20-10SYN	10 MIC. SYNTHETIC	110	710	B10	75
LITE20-6SYN	6 MIC. SYNTHETIC	110	710	B6	75

ELEMENT	AREA MEDIA	AREA IN	CM	BETA	RATIO
LITE20-25P	25 MIC. CELLULOSE	110	710	B25	75
LITE20-25SYN	25 MIC. SYNTHETIC	135	870	B25	2

Phone: 937/277-9364 FAX: 937/277-6516 www.lenzinc.com

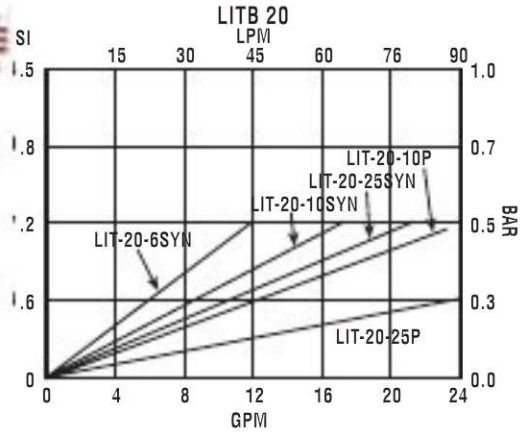

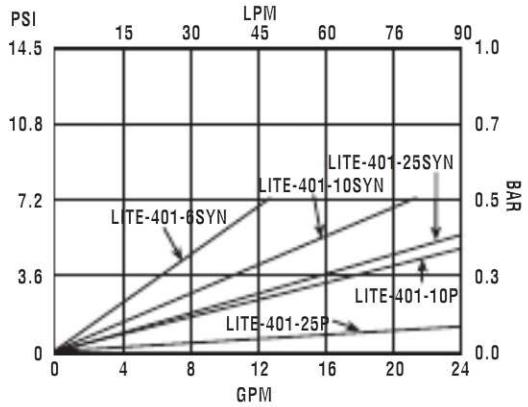

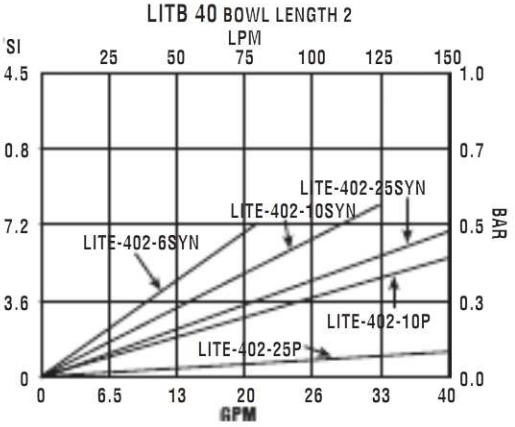

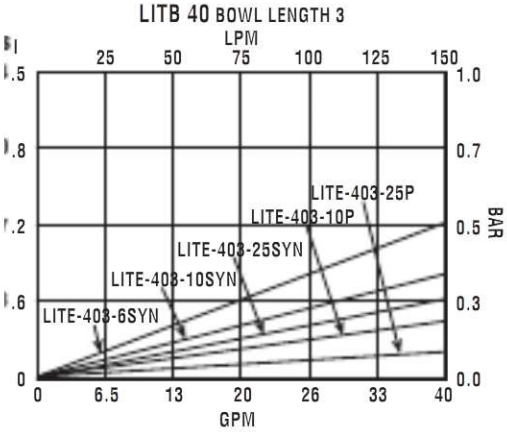

Temperature 100°F Viscosity 150SSU

Average Pressure drop through clean assembly with 150 SUS oil at 100F

Ordering Code

LITB 40 - 1 - 750 - 10 - 40 - D - T - MC-20

SERIES	
LITB 40	NPT
LITBA 40	SAE

BOWL LENGTH	
1	4.3" LONG
2	6.9" LONG
3	10.8" LONG

PORT SIZE	
750	3/4"
1000	1"

MEDIA	
10	10 MIC. CELLULOSE
10 SYN	10 MIC. SYNTHETIC
6 SYN	6 MIC. SYNTHETIC
25	25 MIC. CELLULOSE
25 SYN	25 MIC. SYNTHETIC

BREATHER	
10	10 MICRON
40	40 MICRON

OPTIONS	
D	DIPSTICK
	OMIT

IND. PORTS	
OMIT	NONE
T	1/8 NPT RETURN

INDICATING GAUGES	
(T)	MC-20
(T)	CP-2
(T)	GLY-MC-20
	OMIT

NOTE: Indicators Page 28a

Replacement Elements

	ELEMENT	AREA MEDIA	AREA IN	CM	BETA	RATIO
4.3" BOWL LENGTH	LITE401-10P	10 MICRON CELLULOSE	146	940	B10	2
	LITE401-10SYN	10 MICRON SYNTHETIC	104	670	B10	75
	LITE401-6SYN	6 MICRON SYNTHETIC	104	670	B6	75
	LITE401-25P	25 MICRON CELLULOSE	146	940	B25	75
	LITE401-25SYN	25 MICRON SYNTHETIC	104	670	B25	2
6.9" BOWL LENGTH	LITE402-10P	10 MICRON CELLULOSE	233	1500	B10	2
	LITE402-10SYN	10 MICRON SYNTHETIC	158	1020	B10	75
	LITE402-6SYN	6 MICRON SYNTHETIC	158	1020	B6	75
	LITE402-25P	25 MICRON CELLULOSE	233	1500	B25	75
	LITE402-25SYN	25 MICRON SYNTHETIC	158	1020	B25	2
10.8" BOWL LENGTH	LITE403-10P	10 MICRON CELLULOSE	287	1850	B10	2
	LITE403-10SYN	10 MICRON SYNTHETIC	259	1670	B10	75
	LITE403-6SYN	6 MICRON SYNTHETIC	259	1670	B6	75
	LITE403-25P	25 MICRON CELLULOSE	287	1850	B25	75
	LITE403-25SYN	25 MICRON SYNTHETIC	259	1670	B25	2

Visit our Website for installation, instructions and technical bulletins

Disposable Filter Cartridge Type

Suction or Return Line Filter Assembly
Model "TMR-TMS" Series

- Tank or line mounted.
- 5 sizes-flows to 185 GPM (700 LPM).
- By-pass standard. Return: 15 PSI Suction: 3 PSI
- Aluminium die cast construction.
- Working pressure to 300 PSI (21 bar)
- Buna Seals.
- Operating Temperatures -22° F to +212° F (-32° C to +100° C)
- For use with petroleum based fluids

TMR-2500

TMR-1000

TME

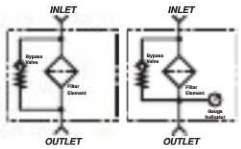

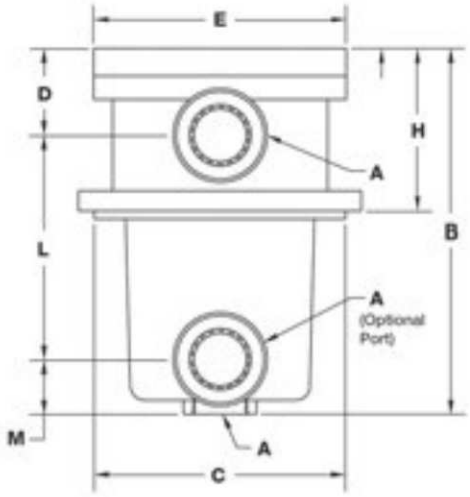

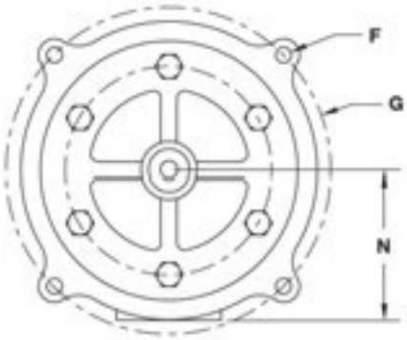

C = Tank Cutout Dimension
G = Tank Mount Bolt Circle

MODEL	Port A (NPT)		B	C	D	E	F	G	H	L	M	N	WT LB / KG
TM*-500	1/2"	IN	4.6	3.3	1.1	3.9	0.3	3.7	1.8	2.2	1.3	2.0	3
		MM	117.0	83.0	29.0	98.0	5.6	93.0	46.0	56.0	33.0	52.0	1.4
TM*-750	3/4"	IN	6.9	4.8	1.7	4.6	0.3	5.4	3.0	4.3	1.0	2.3	5
		MM	176.0	121.0	43.0	117.0	6.5	138.0	77.0	110.0	26.0	58.0	2.3
TM*-1000	1"	IN	10.1	5.3	2.5	5.6	0.3	6.1	4.4	5.5	2.0	2.8	6.5
		MM	257.0	134.0	64.0	143.0	6.5	154.0	113.0	140.0	52.0	71.0	3
TM*-1500	1 1/2"	IN	11.8	6.3	2.6	7.2	0.3	7.1	4.6	6.3	3.0	3.5	12
		MM	300.0	161.0	65.0	182.0	8.5	180.0	117.0	159.0	77.0	88.0	5.5
TM*-2500	2 1/2" SAE	IN	13.9	9.1	3.1	9.6	0.4	10.8	5.7	7.0	3.7	4.9	26.0
	FLANGE	MM	353.0	232.0	78.0	244.0	10.5	275.0	146.0	178.0	95.0	124.0	11.8

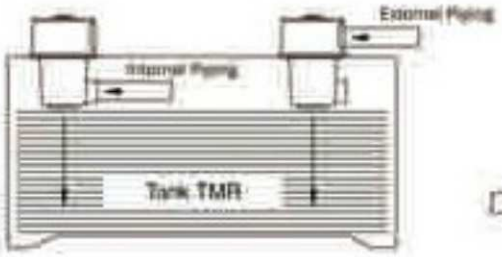

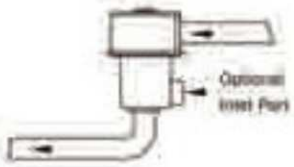

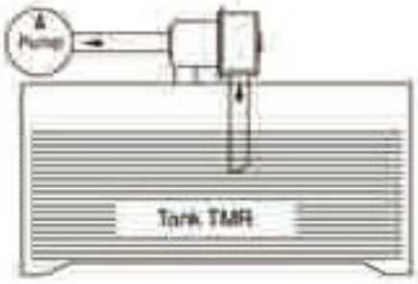

Phone: 937/277-9364 FAX: 937/277-6516 www.lenzinc.com

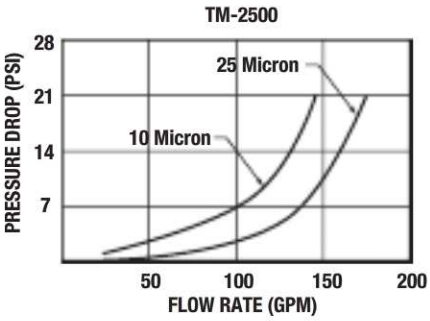

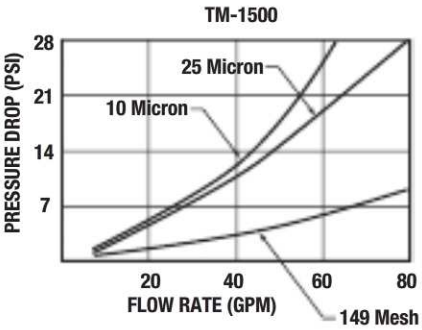

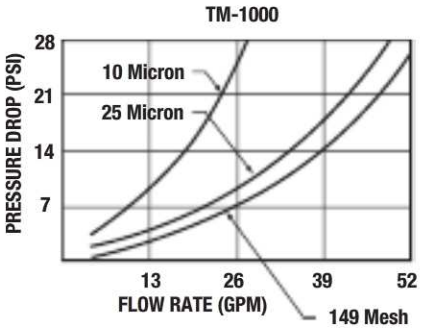

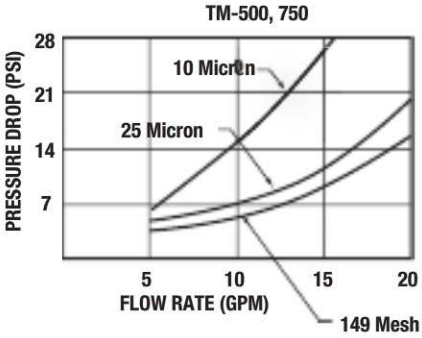

Ordering Code

TMR — 2 — 500 — B — 10 — T — MC20

B = BUNA Seal

INLET PORT	
NP	Not Ported
2	Ported

STYLE	
TMR	Return (15 PSI By-Pass)
TMS	Suction (3 PSI By-Pass)

Size	PORT (NPT)
500	1/2"
750	3/4"
1000	1"
1500	11 1/2"
2500	2 1/2" SAE Split Flange

ELEMENT	
10	10µ Nominal 10 Micron Cellulose
25	25µ Nominal 25 Micron Cellulose
100	149 Micron SS Mesh
10 SYN	10 Micron Synthetic

IND. PORTS	
OMIT	NONE
T	1/8 NPT RETURN
S	1/8 NPT SUCTION

INDICATING GAUGES
(T) MC-12
(T) MC-20
(T/S) CP-2
(T) GLY-MC-20
(S) 135080
(S) VAC-3-20
OMIT

All housings have machined optional inlet port. Lenz will supply plug if NP option is ordered.

NOTE:
Indicators Page 28a

Replacement Elements

MODEL NUMBER	MEDIA	IN	CM	B= 2/20/75
TME-502-10	10 MICRON CELLULOSE	110	710	6µ/8µ/13µ
TME-502-25	25 MICRON CELLULOSE	110	710	24µ/35µ/43µ
TME-502-100M	140 MICRON WIRE MESH	50	325	3µ/5.5µ/12µ
TME-752-10	10 MICRON CELLULOSE	271	1748	6µ/8µ/13µ
TME-752-25	25 MICRON CELLULOSE	271	1748	24µ/35µ/43µ
TME-752-100M	140 MICRON WIRE MESH	93	600	3µ/5.5µ/12µ
TME-1002-10	10 MICRON CELLULOSE	410	2645	6µ/8µ/13µ
TME-1002-25	25 MICRON CELLULOSE	410	2645	24µ/35µ/43µ
TME-1002-100M	140 MICRON WIRE MESH	140	903	3µ/5.5µ/12µ
TME-1502-10	10 MICRON CELLULOSE	1225	7903	6µ/8µ/13µ
TME-1502-25	25 MICRON CELLULOSE	1225	7903	24µ/35µ/43µ
TME-1502-100M	140 MICRON WIRE MESH	340	2200	3µ/5.5µ/12µ
TME-2502-10	10 MICRON CELLULOSE	2250	14516	6µ/8µ/13µ
TME-2502-25	25 MICRON CELLULOSE	2250	14516	24µ/35µ/43µ
TME-2502-100M	140 MICRON WIRE MESH	542	3496	3µ/5.5µ/12µ

For 25 Micron Synthetic, 74 Micron Mesh, replacement elements consult factory

In-Tank Filters
Low Profile Filter Cartridge Type
Return Line Application
Model "TIF" 500, 750, 1000, 1250

TIF-500

TIF-1000

TIE

Specifications

- Working pressure 150 PSI (10 bar)
- Aluminum die cast housing and lid
- Flows to 40 GPM (150 LPM)
- Bypass 15 PSI (1 BAR)
- Elements replaceable through cover
- Suitable for petroleum based fluids
- Max temp 180° F (80 deg C)
- Buna Seals
- 1/2, 3/4, 1, 1 1/4 Port sizes

Options

- NPT or SAE ports
- 10, 25 micron cellulose, synthetic elements
- Visual indicators

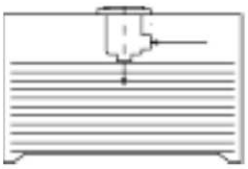
TIF

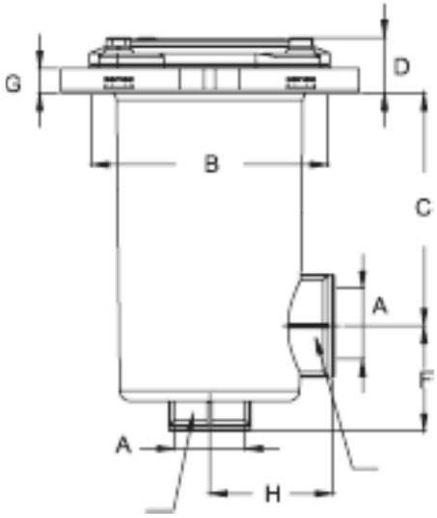

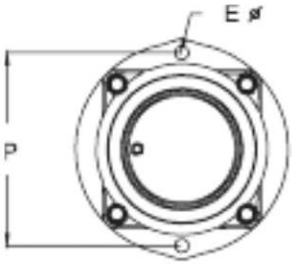

TIF - 500
TIF - 750
TIF - 1000

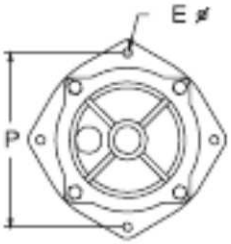

TIF - 1250

Dimensional Details

MODEL	PORT		B	C	D	E	F	G	H	P	COVER	WEIGHT
TIF-500	1/2" NPT	IN	3.1	2.8	0.9	0.3	1.3	.27	1.9	3.9		2
	3/4" - 16 SAE	MM	80	71	23	7	34	7	48	100	M6	0.9
TIF-750	3/4" NPT	IN	4.1	2.7	0.9	0.4	1.9	0.4	2.3	5.0		3
	1 1/6" - 12 SAE	MM	105	68	24	9	48	10	58	126	M6	1.4
TIF-1000	1" NPT	IN	4.1	4.3	0.9	0.4	2.2	0.4	2.3	5.0		3.5
	1 5/16" - 12 SAE	MM	105	110	24	9	55	10	58	126	M6	1.6
TIF-1250	1 1/4" NPT	IN	6.1	7.5	1.4	0.4	2.4	0.6	3.3	6.9		6.6
	1 5/8" - 12 SAE	MM	156	190	35	9	62	14	83	175	M6	3

SAE PORTS AVAILABLE IN QUANITIES 25+

Phone: 937/277-9364 FAX: 937/277-6516 www.lenzinc.com

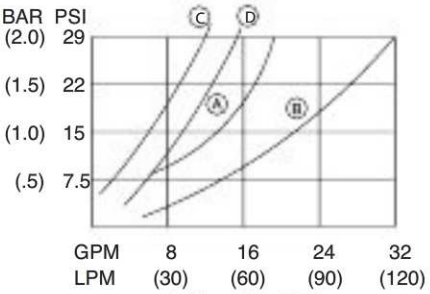

TIF - 500, 750

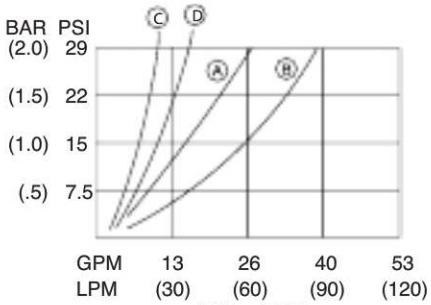

TIF - 1000

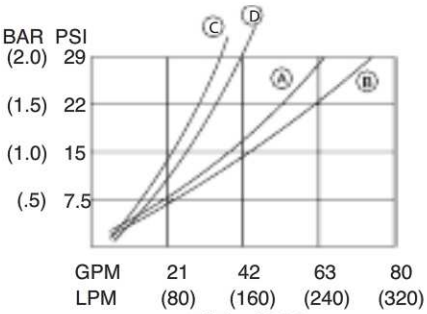

TIF - 1250

Ⓐ 10 Micron Ⓑ 25 Micron Ⓒ 10 Micron Synthetic Ⓓ 25 Micron Synthetic

Ordering Code

TIF — 500— 10 — P — T — MC-12

SERIES
TIF

MODEL	PORT SIZE
500	1/2" PORT
750	3/4" PORT
1000	1" PORT
1250	1 1/4" PORT

MEDIA	
10	10 MICRON CELLULOSE
25	25 MICRON CELLULOSE
10SYN	10 MICRON SYNTHETIC
25SYN	25 MICRON SYNTHETIC

BYPASS	
P	(15 PSI)

IND PORTS
OMIT NONE
T 1/8" NPT

INDICATORS
MC-12
CP-2

if your application requires an indicator then you need to select indicator port location

For indicator gauge specifications see page 28a

Replacement Elements

MODEL NUMBER	MEDIA	IN²	CM²	B(X)=2/20/75
LIT-502-10P	10 MICRON CELLULOSE	110	710	6µ/8µ/13µ
LIT-502-25P	25 MICRON CELLULOSE	110	710	24µ/35µ/43µ
LIT-502-10SYN	10 MICRON SYNTHETIC	78	500	3µ/5.5µ/12µ
LIT-502-25SYN	25 MICRON SYNTHETIC	78	500	7µ/16µ/23µ
TIE-752-10P	10 MICRON CELLULOSE	190	1225	6µ/8µ/13µ
TIE-752-25P	25 MICRON CELLULOSE	190	1225	24µ/35µ/43µ
TIE-752-10SYN	10 MICRON SYNTHETIC	135	875	3µ/5.5µ/12µ
TIE-750-25SYN	25 MICRON SYNTHETIC	135	875	7µ/16µ/23µ
LIT-752-10P	10 MICRON CELLULOSE	380	2450	6µ/8µ/13µ
LIT-752-25P	25 MICRON CELLULOSE	380	2450	24µ/35µ/43µ
LIT-752-10SYN	10 MICRON SYNTHETIC	271	1750	3µ/5.5µ/12µ
LIT-752-25SYN	25 MICRON SYNTHETIC	271	1750	7µ/16µ/23µ
TIE-1252-10P	10 MICRON CELLULOSE	949	6120	6µ/8µ/13µ
TIE-1252-25P	25 MICRON CELLULOSE	949	6120	24µ/35µ/43µ
TIE-1252-10SYN	10 MICRON SYNTHETIC	667	4300	3µ/5.5µ/12µ
TIE-1252-25SYN	25 MICRON SYNTHETIC	667	4300	7µ/16µ/23µ

LIT-752 elements fit TIF-1000 Series Filters

2" Diameter Indicating Gauges

MC-12

Return Line Indicating Gauge
for 15 P.S.I. Filter Applications
2" Multi color

0-12 P.S.I. Green
12-15 P.S.I. Yellow
15-60 P.S.I. Red (Service Filter)

(To be used with "T" Indicator Port Location)

MC-20

Return Line Indicating Gauge
for 25 P.S.I. Filter Applications
2" Multi color

0-20 P.S.I. Green
21-24 P.S.I. Yellow
25-60 P.S.I. Red (Service Filter)

(To be used with "T" Indicator Port Location)

CP-2

Compound Indicating Gauge
(Suction or Return Line)

10" to 30" Vacuum is a Red Danger Area.
0-60 PSI
A Red "Change Filter" Sticker for the Pressure side is included with each gauge for application after the pressure factor is determined.

(To be used with "T" or "S" Indicator Port Location)

GLY-MC-20

Glycerin Filled

Return Line Indicating Gauge
for 25 P.S.I. Filter Applications
2" Multi color

0-20 P.S.I. Green
21-24 P.S.I. Yellow
25-60 P.S.I. Red (Service Filter)

(To be used with "T" Indicator Port Location)

135080

Suction Line Indicating Gauge for
5 P.S.I. vacuum filter application
2" Multi color

0-9" HG Green
9-11" HG Yellow
11-30" HG Red (Service Filter)

(To be used with "S" Indicator Port Location)

VAC-3-20

Suction Line Indicating Gauge
for 3 P.S.I. vacuum filter applications
2" Multi color

0-3" HG Green
4-6" HG Yellow
6-30" HG Red (Service Filter)

(To be used with "S" Indicator Port Location)

Differential Indicator DP-75

Simple differential sliding indicator which changes from green to red at 7 P.S.I.D.

0 - 7 P.S.I.D. Green Clean
7 - 10 P.S.I.D. Red Service Filter
CP Series (500, 750, 1010, 1280, 1580)

Pressure And Vacuum Switches

Electrical indicators for use with Lenz Filters

LES-P2	25 PSI BYPASS
LES-P1	15 PSI BYPASS
LES-V1	5-28 IN HG

See indicators in filter section of our website www.lenzinc.com for more information on LES Series.

Phone: 937/277-9364 FAX: 937/277-6516 www.lenzinc.com

Sump Strainers

49 / N49

49-SERIES

OPTIONAL
Built-in relief valve to prevent pump starvation
Add R3 or R5

Plated Steel Hex, Nylon Hex, Aluminum Hex Pipe Nut Coupling:
In a full range of NPT sizes, 3/4" thru 3". Welded on.

Steel Support Tube:
Provides rigidity, permits easy cleaning and better flow.

Pleated, Reusable Stainless Wire Cloth:
Keeps its shape and allows better flow. For use with hydraulic fluids, oils, coolants, cutting oils and lubricants. Excellent for mobile equipment. Easily cleaned. Choice of 30, 60, 100 or 200 mesh. See table.

Plated Steel Cap End:
Epoxy-bonded for one-piece construction.

Trouble-Free Positive Protection:
All metal, nickel plated construction. No organic elements to deteriorate. These smooth, one-piece, epoxy-bonded units are carefully and compactly constructed with quality materials throughout. They assure trouble-free, positive protection for the entire system. Excellent for mobile equipment.

Easily Installed and Cleaned:
Easily removed and cleaned with gasoline and similar solvents.

OPTIONAL:
Nylon hex pipe nut coupling, one piece. Aluminum hex pipe nut coupling (Consult Factory) made to order.

Bypass Valves
3 P.S.I./ 6" HG
5 P.S.I./ 10" HG

Operating Temperature
15F° (-9 C) to 212 F° (100C)

Magnetic Bands
Optional magnets are available

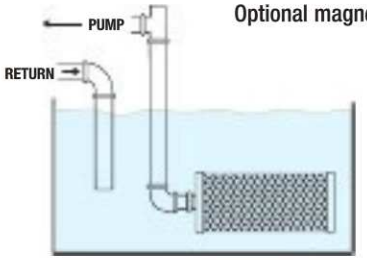

Typical Single Unit Installation

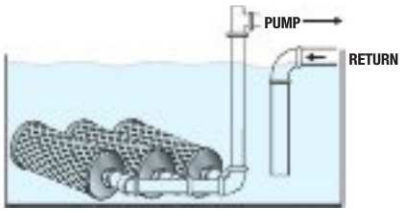

Typical Multiple Unit Installation

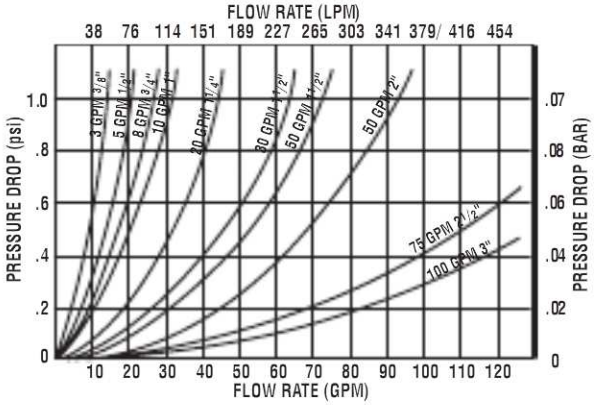

Temperature 100°F Viscosity 150SUS
Average Pressure drop through clean assembly with 150 SUS oil at 100F

Rated Flow Capacity Under 1" HG (1.5 P.S.I.) Pressure Drop @ 5ft./sec

AN-WM Weld Adapter
See page 36a

Ordering Code

49 — 20 — R3 — 100 — MAG

SERIES
49
N49

FLOW	SIZE
3	3/8" NPT
4	1/2" NPT
5	3/4" NPT
10	1" NPT
20	1 1/4" NPT
30	1 1/2" NPT
50	1 1/2" NPT
50	2" NPT
75	2 1/2" NPT
100	3" NPT
*200	3" NPT
*300	4" NPT
*400	4" NPT
*600	6" NPT

*Not available nylon aluminum nuts

BYPASS	
OMIT	NO BYPASS
R3	3 PSI BYPASS
R5	5 PSI BYPASS

MESH	
100	100 MESH (STANDARD)
30	30 MESH
60	60 MESH
200	200 MESH

OPTIONS	
OMIT	
MAG	MAGNETS

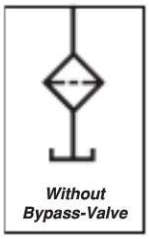

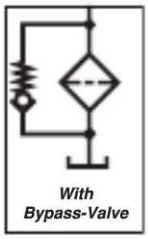

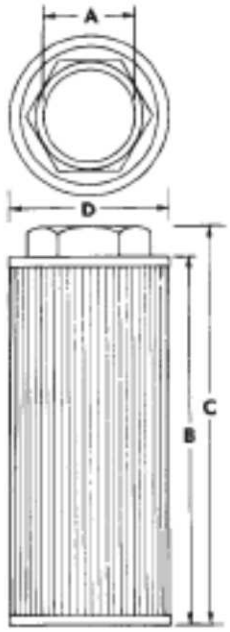

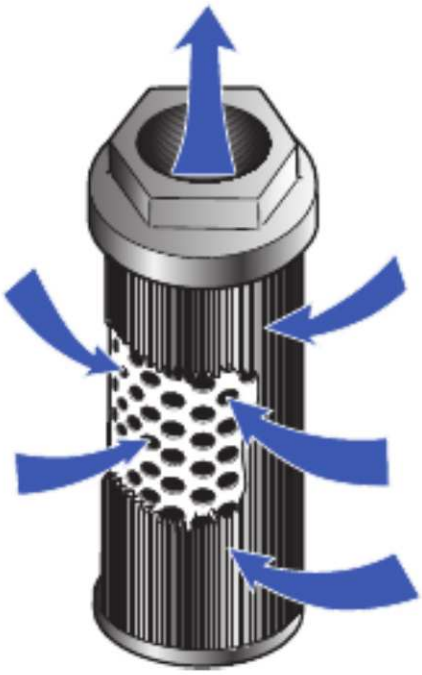

Dimensional Details

MODEL STEEL	MODEL NYLON	FLOW		A	B	C	D	AREA IN² (CM²)
49-3	N49-3	3 GPM 11 LPM	IN MM	3/8"	1.2 30.4	2.5 63.5	1.9 48.3	34 (219.3)
49-4	N49-4	5 GPM 20 LPM	IN MM	1/2"	1.9 48.2	3.1 78.7	2.6 66	62 (399.9)
49-5	N49-5	8 GPM 30 LPM	IN MM	3/4"	2.9 73.7	3.6 91.4	2.6 66	88 (567)
49-10	N49-10	10 GPM 40 LPM	IN MM	1"	4.6 116.8	5.4 137.2	2.6 66	110 709.5)
49-20	N49-20	20 GPM 80 LPM	IN MM	1 1/4"	6.1 154.9	6.9 175.3	3 76.2	162 (1044.9)
49-30	N49-30	30 GPM 120 LPM	IN MM	1 1/2"	7.2 182.9	8 203.2	3.3 83.8	225 (1451.3
49-50	N49-50	50 GPM 200 LPM	IN MM	1 1/2"	9.1 231.1	9.9 251.5	3.9 99.1	340 (2193)
49-50-2	N49-50-2	50 GPM 200 LPM	IN MM	2"	9.1 231.1	9.9 251.5	3.9 99.1	340 (2193)
49-75	N49-75	75 GPM 285 LPM	IN MM	2 1/2"	9.1 231.1	10.1 256.5	5.1 129.5	400 (2580)
49-100	N49-100	100 GPM 380 LPM	IN MM	3"	10.4 264.2	11.8 299.7	5.1 129.5	500 (3225)
49-200	N/A	200 GPM 800 LPM	IN MM	4"	8.6 220	11.6 295	7.9 200	965 (6225)
49-300	N/A	300 GPM 1200 LPM	IN MM	4"	12 306	15 381	7.9 200	1370 (8840)
49-400	N/A	400 GPM 1600 LPM	IN MM	4"	15.2 387	18.2 462	7.9 200	1740 (11,225)
49-600	N/A	600 GPM 2400 LPM	IN MM	4"	13.4 340	24.2 615	7.9 200	2430 (15,675)

Pressure drop will be < 2 PSI

Phone: 937/277-9364 FAX: 937/277-6516 www.lenzinc.com

LTM Series

Designed for ease of servicing.
Access to tank interior is not necessary

Specifications:
- Steel Zinc Plate 3, 5, 10 GPM
- Cast iron bushings 15 thru 200 GPM
- Perforated steel support tubes
- 100 mesh stainless steel pleated screen

Options:
- No bypass or 3 & 5 P.S.I. bypass
- Custom screens available on request
- Stainless nuts 100 pc. minimum

LTM 3, 5 and 10

LTM-15 thru 200

Optional Relief Valve Shown

Dimensional Details

MODEL NUMBER	FLOW	A NPT	B NPT		C	D	E	F	AREA (CM)
LTM-3	3 GPM	3/4"	3/8"	IN	4.00	0.98	0.79	1.18	30
	12 LPM			MM	101.6	25	20	30	194
LTM-5	5 GPM	1"	1/2"	IN	5.39	1.13	1.10	1.50	55
	20 LPM			MM	137	28	28	38	355
LTM-10	10 GPM	1 1/4"	3/4"	IN	7.48	1.22	1.42	1.81	90
	40 LPM			MM	190	31	36	46	581
LTM-11	15 GPM	1 1/4"	3./4"	IN	5.75	1.30	1.65	1.97	75
	60 LPM			MM	146	33	42	50	484
LTM15	18 GPM	1 1/2"	1"	IN	8.27	1.30	1.65	1.97	110
	72 LPM			MM	210	33	42	50	710
LTM-25	25 GPM	2"	1 1/4"	IN	10.00	1.30	2.13	2.60	175
	100 LPM			MM	254	33	54	66	1129
LTM-30	30 GPM	3"	1 1/4"	IN	10.24	1.69	3.07	2.60	265
	120 LPM			MM	260	43	78	66	1709
LTM-40	30 GPM	3"	1 1/2"	IN	10.24	1.69	3.07	2.60	265
	120 LPM			MM	260	43	78	66	1709
LTM-50	40 GPM	3"	2"	IN	10.24	1.69	3.07	3.23	265
	160 LPM			MM	260	43	78	82	1709
LTM-60	60 GPM	3"	2 1/2"	IN	10.24	2.01	3.07	0.05	265
	100 LPM			MM	260	51	78	1.25	1709
LTM-75	75 GPM	4"	2 1/2"	IN	9.69	1.81	3.78	4.65	300
	300 LPM			MM	246	46	96	118	1935
LTM-100	100 GPM	4"	3"	IN	11.30	1.81	3.78	4.65	355
	380 LPM			MM	287	46	96	118	2290
LTM-200	200 GPM	6"	4"	IN	12.44	2.28	5.71	0.06	860
	750 LPM			MM	316	58	145	1.44	5547

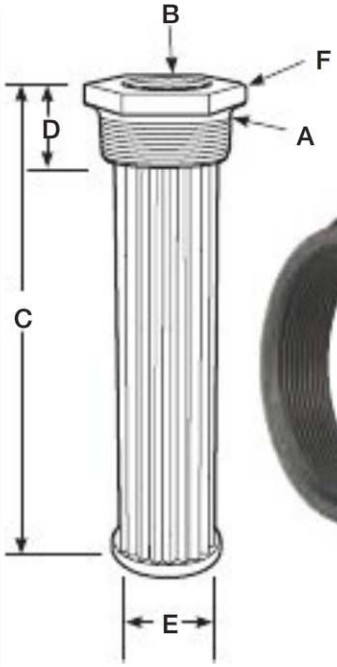

WFN FLANGE

See Page 35-37a for WFN Series Weld Flanges
Pressure drop will be < 2PSI

Ordering Code

LTM - 15 - R3 - 100

SERIES
LTM

FLOW
3
5
10
11
15
25
30
40
50
60
75
100
200

BYPASS	
OMIT	NO BYPASS
R3	3 PSI BYPASS
R5	5 PSI BYPASS

MESH	
100	100 MESH (STANDARD)
30	30 MESH
60	60 MESH
200	200 MESH

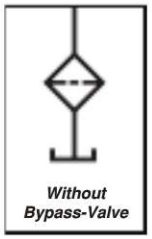

Without Bypass-Valve

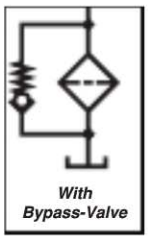

With Bypass-Valve

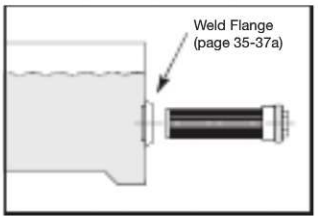

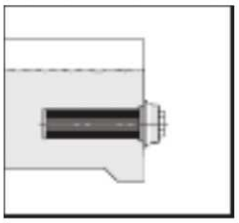

Mounting Details:
Mount through sidewall or through tank top and into standpipe.

LTMA Series

Specifications:

- 1 1/16"-12 SAE thru 3 3/8"-12 SAE
- Die Cast Aluminum Bushing
- 100 Mesh Stainless Steel Mesh
- Flows to 40 G.P.M.
- Side Wall or Tank Top Mounting
- Buna O-Ring

Options:

- No bypass, 3 or 5 P.S.I. bypass
- 30, 60, 200 Mesh Screen Available

Optional Relief Valve Shown

Dimensional Details

MODEL NUMBER	FLOW	A SAE	B SAE		HEX A/F	E	L	L1	AREA (CM2)
LTMA-3	3 GPM	1 1/16-12	3/4-16	IN	1.24	0.79	4.00	2.64	30
	12 LPM			MM	31.5	20	101.6	67	194
LTMA-5	5 GPM	1 5/16-12	3/4-16	IN	1.24	1.13	5.39	4.02	54
	20 LPM			MM	31.5	28.5	137	102	348
LTMA-10	10 GPM	1 5/8-12	1 1/16-12	IN	1.50	1.42	8.19	6.77	90
	40 LPM			MM	38	36	208	172	581
LTMA-15	15 GPM	1 7/8-12	1 5/16-12	IN	1.81	1.67	8.19	6.77	120
	60 LPM			MM	46	42	208	172	774
LTMA-18	18 GPM	2 1/2-12	1 5/16-12	IN	2.13	2.13	9.06	7.64	160
	72 LPM			MM	54	54	230	194	1032
LTMA-25	25 GPM	2 1/2-12	1 5/8-12	IN	2.13	2.13	9.00	7.64	160
	100 LPM			MM	54	54	228.6	194	1032
LTMA-30	30 GPM	3 3/8-12	1 7/8-12	IN	2.48	3.07	8.80	7.24	230
	120 LPM			MM	63	78	223.5	184	1484
LTMA-40	40 GPM	3 3/8-12	2 1/2-12	IN	2.99	3.07	9.30	7.48	230
	160 LPM			MM	76	78	236.2	190	1484

*See Page 35-37a for LWBA, WFA Series, Weld Bushings and Flanges
Pressure drop will be < 2PSI

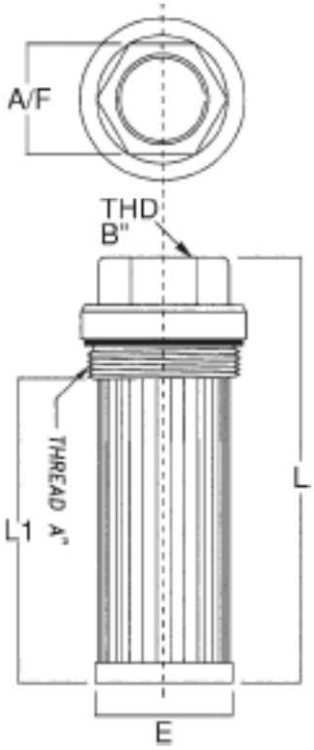

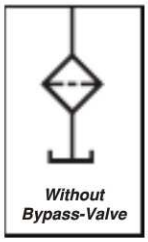

Without Bypass-Valve

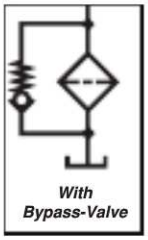

With Bypass-Valve

Ordering Code

LTMA - 15 - R3 - 100

SERIES
LTMA

FLOW
3
5
10
15
18
25
30
40

BYPASS	
OMIT	NO BYPASS
R3	3 PSI BYPASS
R5	5 PSI BYPASS

MESH	
100	100 MESH (STANDARD)
30	30 MESH
60	60 MESH
200	200 MESH

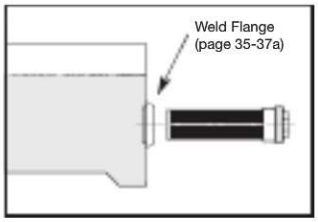

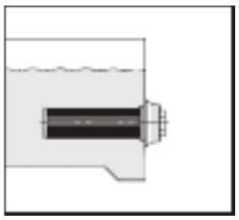

Mounting Details:
Mount through sidewall or through tank top and into standpipe.

Phone: 937/277-9364 FAX: 937/277-6516 www.lenzinc.com

LTMAB Series

Designed for ease of servicing.
Access to tank interior is not necessary

Specifications:
- 1 7/8"-12 SAE thru 3 3/8"-12 SAE connections
- 1" to 2" Hose Bead
- Forged Zinc plated fitting
- 100 mesh stainless steel mesh
- Buna O-Ring

Options:
- Optional relief valve available
- Specify bypass – R3 or – R5
- 30, 60, 200 mesh available
- Viton O-Ring

Optional Relief Valve Shown

Dimensional Details

MODEL NUMBER	FLOW	A SAE		OD BARB	L	L1	A/F	E	AREA CM²
LTMAB-1616	4 GPM	1 5/16"	IN	1	5.51	3.15	1.50	1.12	42
	16 LPM		MM	25.4	140	80	38	28.5	271
LTMAB-1516	10 GPM	1 7/8-12	IN	1	9.25	6.69	1.25	1.65	100
	40 LPM		MM	25.4	235	170	31.75	42	645
LTMAB-1520	15 GPM	1 7/8"-12	IN	1.25	9.25	7.28	1.25	1.65	109
	60 LPM		MM	31.8	235	185	31.75	42	708
LTMAB-2125	15 GPM	2 1/2-12	IN	1.25	10.00	7.40	1.50	2.13	160
	60 LPM		MM	31.8	254	188	38.1	54	1032
LTMAB-4825	20 GPM	3 3/8-12	IN	1.25	10.31	7.20	2.00	3.07	230
	80 LPM		MM	31.8	262	183	50.8	78	1484
LTMAB-4850	30 GPM	3 3/8-12	IN	1.5	10.31	7.20	2.00	3.07	230
	120 LPM		MM	38.1	262	183	50.8	78	1484
LTMAB-4832	40 GPM	3 3/8-12	IN	2	10.83	7.20	2.50	3.07	230
	160 LPM		MM	50.8	275	183	63.5	78	1484

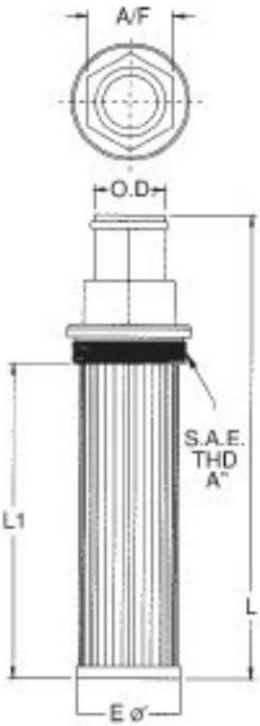

**See Page 35-37a for LWBA, WFA Series, Weld Bushings and Flanges*
Pressure drop will be < 2PSI

Ordering Code

LTMAB - 1516 - R3 - 100

SERIES
LTMAB

FLOW
1616
1516
1520
2125
4825
4850
4832

BYPASS	
OMIT	NO BYPASS
R3	3 PSI BYPASS
R5	5 PSI BYPASS

MESH	
100	100 MESH (STANDARD)
30	30 MESH
60	60 MESH
200	200 MESH

WFA-32
(page 35a)

LTMAB-2125
Strainer

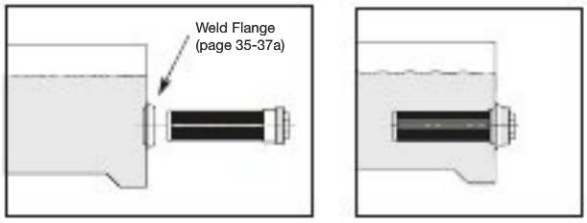

Mounting Details:
Mount through sidewall or through tank top and into standpipe.

LTF Series

Designed for ease of servicing. Access to tank interior is not necessary

Specifications
- Flows up to 49 GPM
- Cast iron bushing
- Perforated steel support tubes
- 100 mesh stainless steel pleated elements

Options
- No bypass or 5 P.S.I. bypass
- 30, 60, 200 mesh available upon to request

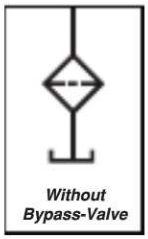

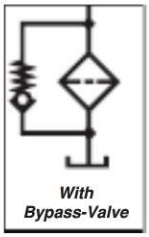

Optional Relief Valve Shown

Dimensional Details

MODEL NUMBER	FLOW	A NPT	B NPT		L	L1	L2	E	HEX A/F	AREA CM²
LTF-32-32	50 GPM 200 LPM	2"	2"	IN MM	13.50 343	10.75 273	2.72 69	2.13 54	2.75 70	135 870

*See Page 35a for WFN Series Weld Flanges
Pressure drop will be < 2PSI

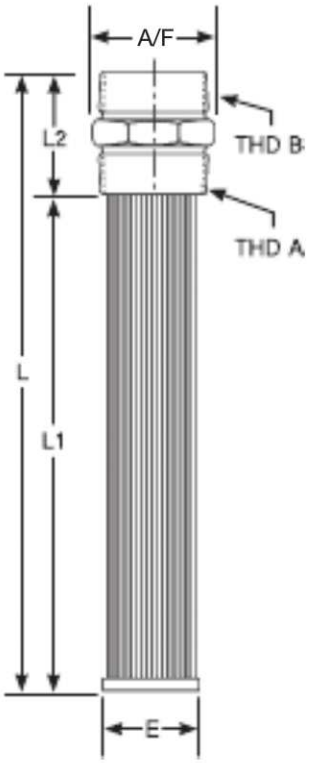

Ordering Code

LTF - 32-32 - R3 - 100

SERIES
LTF

SIZE
32-32

BYPASS	
OMIT	NO BYPASS
R3	3 PSI BYPASS
R5	5 PSI BYPASS

MESH	
100	100 MESH (STANDARD)
30	30 MESH
60	60 MESH
200	200 MESH

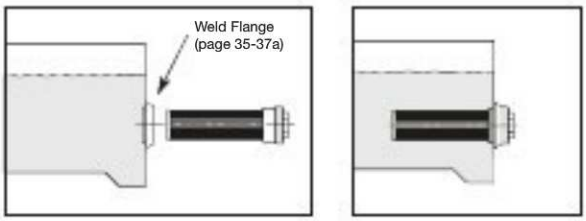

Mounting Details:
Mount through sidewall or through tank top and into standpipe.

Phone: 937/277-9364 FAX: 937/277-6516 www.lenzinc.com

WF, WFA Weld Flanges

- Forged steel construction (AISI 1018-AISI 1020)
- Phosphate finish makes them suitable for welding
- Flanged pilot design makes for easy installation
- -4 to -48 SAE O-Ring port ensures leak proof protection
- 1/8" -3" NPT threads available
- WF-SS-* or WFA-SS-* 304 stainless steel

Dimensional Details

SAE MODEL	SAE PORT	NPT MODEL	NPT PORT		A	B	C	D	E
		WF-2N	1/8"	IN	1	0.59	0.55	0.29	.59
				MM	25.4	15.00	14.00	7.50	15.00
WFA-4	7/16"–20	WF-4N	1/4"	IN	1.5	0.93	0.56	0.31	1
				MM	38.10	23.62	14.22	7.87	25.40
WFA-5	1/2"–20			IN	1.5	0.93	0.56	0.31	1
				MM	38.10	23.62	14.22	7.87	25.40
WFA-6	9/16"–18	WF-6N	3/8"	IN	1.5	0.93	0.56	0.31	1
				MM	38.10	23.62	14.22	7.87	25.40
WFA-8	3/4"–16	WF-8N	1/2"	IN	1.5	0.93	0.56	0.31	1
				MM	38.10	23.62	14.22	7.87	25.40
WFA-10	7/8"–14			IN	2.13	1.38	0.69	0.44	1.44
				MM	54.10	35.05	17.53	11.18	36.58
WFA-12	1 1/16"–12	WF-12N	3/4"	IN	2.13	1.38	0.69	0.44	1.44
				MM	54.10	35.05	17.53	11.18	36.58
WFA-14	1 3/16"–12			IN	2.38	1.66	0.75	0.5	1.75
				MM	60.45	42.16	19.05	12.70	44.45
WFA-16	1 5/16"–12	WF-16N	1"	IN	2.38	1.66	0.75	0.5	1.75
				MM	60.45	42.16	19.05	12.70	44.45
WFA-20	1 5/8"–12	WF-20N	1 1/4"	IN	2.69	2	0.75	0.5	2.13
				MM	68.33	50.80	19.05	12.70	54.10
WFA-24	1 7/8"–12	WF-24N	1 1/2"	IN	3	2.25	0.75	0.5	2.38
				MM	76.20	57.15	19.05	12.70	60.45
WFA-32	2 1/2"–12	WF-32N	2"	IN	3.5	2.63	0.86	0.6	2.88
				MM	88.90	66.80	21.84	15.24	73.15
		WF-40N	2 1/2"	IN	4.63	3.66	1	0.81	3.94
				MM	117.60	92.96	25.40	20.57	100.08
WFA-48	3 3/8"–12	WF-48N	3"	IN	4.63	3.66	1	0.81	3.94
				MM	117.60	92.96	25.40	20.57	100.08

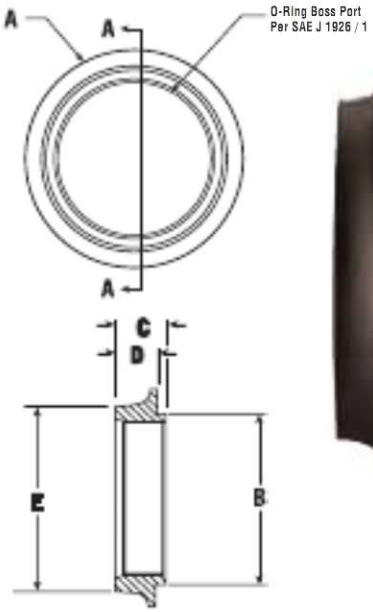

1/8" NPT & 2-1/2" NPT are special order in stainless steel

Ordering Code

WFA — 8 — N — SS

SERIES	
WFA	SAE
WF	NPT

PORT
2
4
*5
6
8
*10
12
*14
16
20
24
32
40
48

* SAE threads only

THREAD	
OMIT	SAE
N	NPT

MATERIAL	
OMIT	STEEL
SS	STAINLESS STEEL

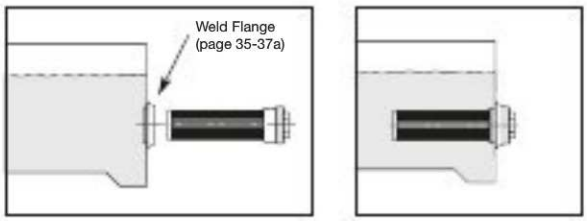

Mounting Details:
Mount through sidewall or through tank top and into standpipe.

AN-WM Weld Adapter

- Mild Steel
- Black Phosphate Finish
- Ideal for installing 49 series sump strainers page 29a

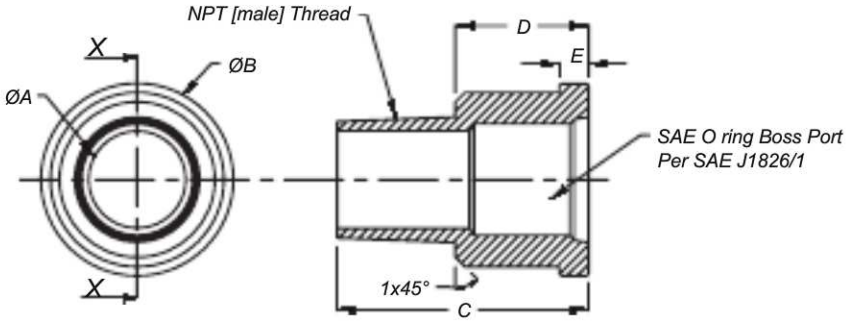

Dimensional Details

PART NO.	PORT SIZE	PORT THREAD	NPT THREAD		A	B	C	D	E
AN-WM-12-12	-12	1-1/16-12 UN 2B	3/4"	IN	0.83	1.63	2.13	1.13	0.25
				MM	21.08	41.4	54.1	28.7	6.35
AN-WM-14-14	-14	1-3/16-12 UN 2B	3/4"	IN	0.83	1.75	2.13	1.13	0.25
				MM	21.08	44.45	54.1	28.7	6.35
AN-WM-16-16	-16	1-5/16-12 UN 2B	1"	IN	1.00	1.88	2.38	1.13	0.25
				MM	25.4	47.75	60.45	28.7	6.35
AN-WM-20-20	-20	1-5/8-12 UN 2B	1 1/4"	IN	1.38	2.25	2.38	1.12	0.36
				MM	35.05	57.15	60.45	28.45	9.14
AN-WM-24-24	-24	1-7/8-12 UN 2B	1 1/2"	IN	1.81	2.50	2.50	1.25	0.36
				MM	46.0	63.5	63.5	31.75	9.14
AN-WM-32-32	-32	2-1/2-12 UN 2B	2"	IN	2.00	3.00	2.50	1.21	0.36
				MM	50.8	76.2	63.5	30.73	9.14

STANDARD HEIGHT MOUNT

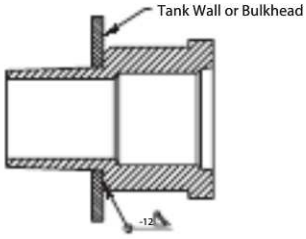

LOW-PROFILE MOUNT OPTION

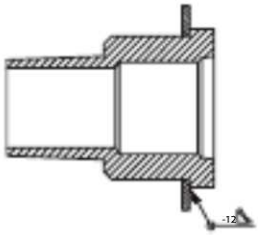

Hole Size Requirements

PART NO.		Standard Mount Height Hole Diameter	Tolerance	Low Profile Mount Hole Diameter	Tolerance
AN-WM-12-12	IN	1.130	+0.030 / -0.000	1.500	+0.030 / -0.000
	MM	28.7	+0.762 / -0.000	38.1	+0.762 / -0.000
AN-WM-14-14	IN	1.130	+0.030 / -0.000	1.625	+0.030 / -0.000
	MM	28.7	+0.762 / -0.000	41.3	+0.762 / -0.000
AN-WM-16-16	IN	1.380	+0.045 / -0.000	1.750	+0.030 / -0.000
	MM	35.05	+1.143 / -0.000	44.45	+0.762 / -0.000
AN-WM-20-20	IN	1.880	+0.045 / -0.000	2.125	+0.030 / -0.000
	MM	47.75	+1.143 / -0.000	54.0	+0.762 / -0.000
AN-WM-24-24	IN	2.000	+0.080 / -0.000	2.375	+0.030 / -0.000
	MM	50.8	+2.032 / -0.000	60.32	+0.762 / -0.000
AN-WM-32-32	IN	2.380	+0.080 / -0.000	2.875	+0.030 / -0.000
	MM	60.45	+2.032 / -0.000	73.0	+0.762 / -0.000

Phone: 937/277-9364 FAX: 937/277-6516 www.lenzinc.com

LW-BA Weld Adapters

FEMALE SAE "O-RING" WELD Adapter

LENZ "LW-BA" Weld Adapters are a female SAE O-ring connector for Lenz SAE male straight thread fittings or any other Lenz hydraulic component with a male SAE straight thread, making for a leak-free installation. Mild steel, phosphate finish.

Dimensional Details

MODEL NUMBER	STAINLESS STEEL	FEMALE SAE	A	B	C	D	E
LWBA-6	LWBA-6-SS	9/16"-18	1.00	0.50	1.00	0.25	0.88
LWBA-8	LWBA-8-SS	3/4"-16	1.25	0.69	1.06	0.25	1.13
LWBA-10	LWBA-10-SS	7/8"-14	1.38	0.81	1.06	0.25	1.25
LWBA-12	LWBA-12-SS	1 1/16"-12	1.50	0.98	1.28	0.25	1.38
LWBA-14	LWBA-14-SS	1 3/16"-12	1.63	1.10	1.25	0.25	1.50
LWBA-16	LWBA-16-SS	1 5/16"-12	1.75	1.23	1.28	0.25	1.63
LWBA-20	LWBA-20-SS	1 5/8"-12	2.25	1.54	1.28	0.25	2.13
LWBA-24	LWBA-24-SS	1 7/8"-12	2.75	1.79	1.28	0.25	2.50
LWBA-32	LWBA-32-SS	2 1/2"-12	3.25	2.41	1.50	0.25	3.00

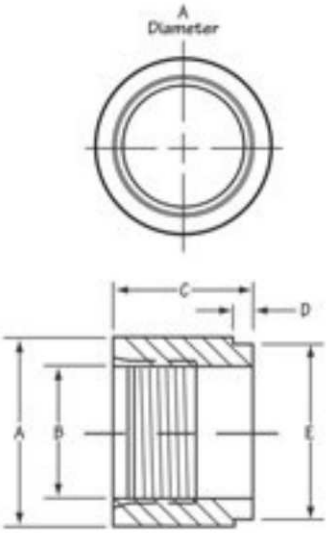

AN-WB Weld Adapters

FEMALE SAE "O-RING" TO FEMALE NPT

LENZ "AN-WB" Weld Adapters are a female SAE "O-Ring" connection on top or side of tank, and the female NPT connection on the inside of the tank, to save time and labor when installing strainers or accessories for a leak-free installation. Mild steel, phosphate finish.

Dimensional Details

MODEL NUMBER	FEMALE SAE	FEMALE PIPE	L +.03	X PILOT DIA.	D DIA.
AN-WB-6-6	9/16"-18	3/8"	1.41	.808	1.00
AN-WB-8-8	3/4"-16	1/2"	1.72	.995	1.125
AN-WB-12-12	1 1/16"-12	3/4"	1.98	1.275	1.50
AN-WB-16-16	1 5/16"-12	1"	2.17	1.495	1.75
AN-WB-20-20	1 5/8"-12	1 1/4"	2.25	1.870	2.125
AN-WB-24-24	1 7/8"-12	1 1/2"	2.26	2.125	2.375
AN-WB-32-32	2 1/2"-12	2"	2.41	3.00	3.25

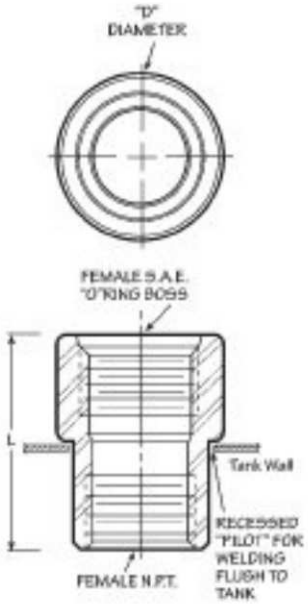

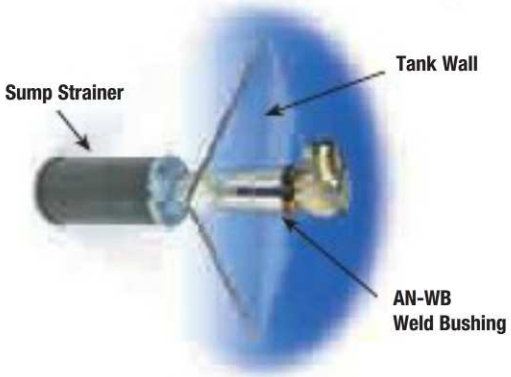

LTMD Series Diffusers

Designed for ease of servicing.
Access to tank interior is not necessary

Specifications :

- Steel bushings (NPT)
- Aluminum bushings (SAE)
- Perforated steel tube
- Temperatures to + 212° F (+100° C)
- Rated flow at 17 F.P.S.

Options:

- SAE Aluminum bushings available - consult factory
- Stainless steel diffuser tubes available-consult factory

LTMD-3 THRU LTMD-10

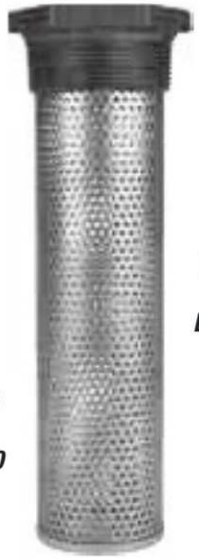

LTMD-15 THRU LTMD-200

Dimensional Details

NPT	SAE	FLOW GPM / LPM		A	B	C	D	E	HEX DIN
LTMD-3		10	IN	3/4"	3/8"	4.0	1.0	0.8	1.06
		38	MM			102	25	20	27
LTMD-5		20	IN	1"	1/2"	5.4	1.1	1.2	1.43
		76	MM			137	28.0	30.0	36
LTMD-10		35	IN	1 1/4"	3/4"	7.5	1.2	1.4	1.81
		132	MM			190	31	36	46
LTMD-15		55	IN	1 1/2"	1"	8.3	1.3	1.7	2
		208	MM			210	33	42	51
	LTMAD-25	95	IN	2 1/2"-12	1 5/8"-12	9.1	1.4	2.1	2.13
		360	MM			230	36	54	54
LTMAD-25		95	IN	2"	1 1/4"	10	1.7	3.0	2.55
		360	MM			254	33	54	65
LTMD-50		210	IN	3"	2"	10	1.7	3.08	3.3
		795	MM			260	43	76	84
LTMD100		465	IN	4"	3"	11	1.8	3.8	5
		1760	MM			287	46	96	127
LTMD-200		550	IN	6"	4"	12.4	2.3	5.7	5.7
		2082	MM			316	58	145	144

**See Page 18a for LWBA, WFA Series, Weld Bushings and Flanges*
Pressure drop will be < 2PSI

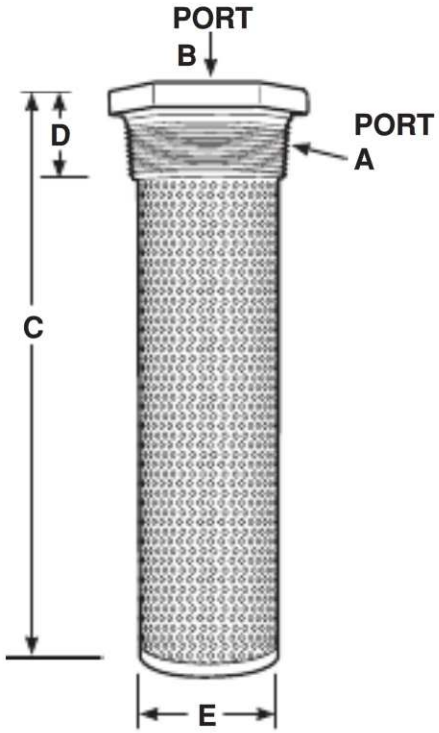

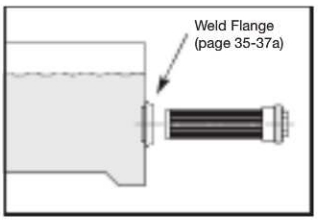

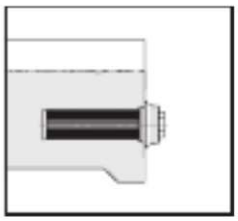

Mounting Details:
Mount through sidewall or through tank top and into standpipe.

Phone: 937/277-9364 FAX: 937/277-6516 www.lenzinc.com

LDFD Series Diffusers

Designed for ease of servicing.

Specifications:

- Aluminum Nut / Zinc plated steel body
- Operating temperature range -13° F to 212° F (-25° C to 100° C)
- Up to 3" NPT port threads
- Flows to 450 GPM (1741 LPM)
- Maximum working pressure 300 P.S.I. (20 Bar)
- Pressure drop at rated flows .5 P.S.I. (.035 Bar)
- Rated flow at 17 F.P.S.

Dimensional Details

MODEL NUMBER	NPT PORT	FLOW		A	B	HEX C
LDFD-10	1/2"	10	IN	1.65	4.09	1.18
		38	MM	42	104	30
LDFD-30	3/4"	33	IN	2.36	5.00	1.38
		125	MM	60	127	35
LDFD-60	1"	53	IN	2.36	6.26	1.81
		201	MM	60	159	46
LDFD-90	1 1/4"	93	IN	3.23	6.26	2.01
		352	MM	82	159	51
LDFD-120	1 1/2"	126	IN	3.23	8.27	2.36
		477	MM	82	210	60
LDFD-200	2"	209	IN	3.23	12.24	2.76
		791	MM	82	311	70
LDFD-250	2 1/2"	300	IN	5.71	8.31	3.54
		1136	MM	145	211	90
LDFD-300	3"	460	IN	5.71	10.71	3.94
		1741	MM	145	272	100

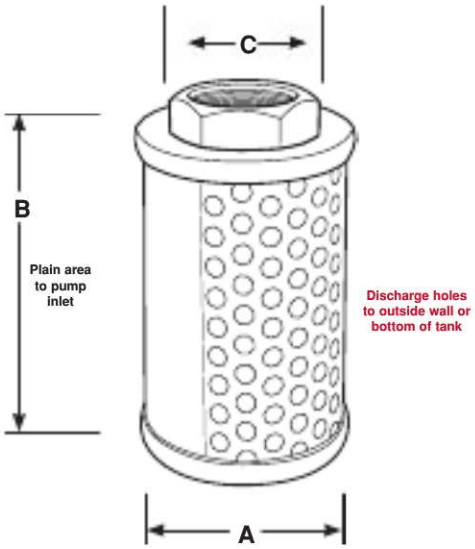

Operation

The LDFD series diffuser consists of two concentric steel tubes each with rows of discharge holes positioned over 120 degrees of their circumference arranged on opposite sides. The inner tube has fewer holes than the outer; to allow for oil velocity to be reduced in two stages as it passes from the inner tube to the outer tube and eventually into the reservoir. The LDFD series diffusers should be installed with the discharge area on the outside tube facing the tank wall or bottom.

Benefits

Designed to effectively reduce fluid aeration, foaming, turbulence, and noise caused by return lines. Pump life is also extended by reducing cavitation to the pump inlet.

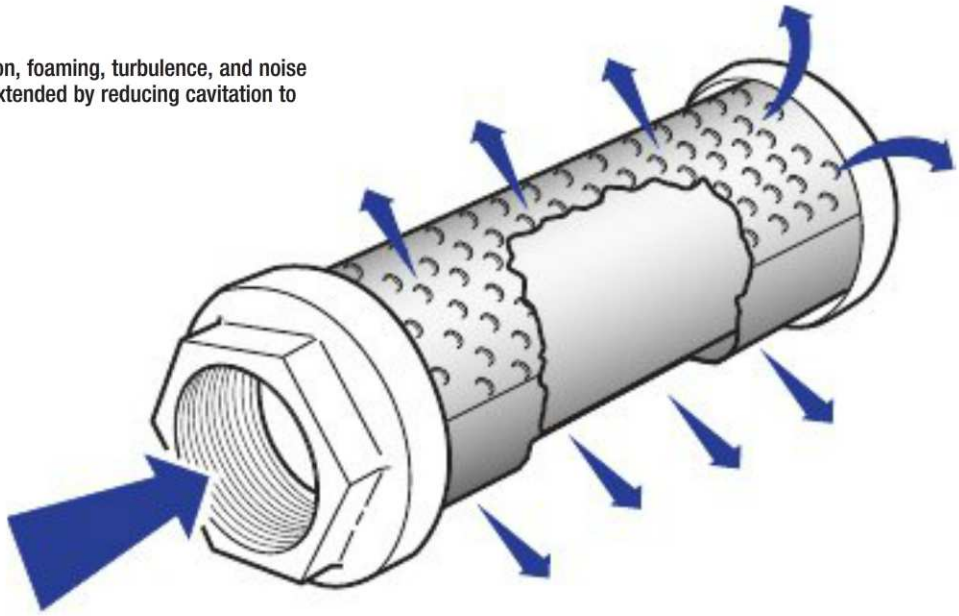

Disc Sump Strainer Standard Types

Stacking Disc Sump Strainers

Model L-G

Lenz Model L-G Strainers are all-metal disc type, for all petroleum base and fire resistant hydraulic oils and other liquids such as water and fuels. They are designed to work efficiently installed in either a vertical or horizontal position.

Lenz Disc Type Strainers can be cleaned more completely than any other design because when the assembly is dismantled, every square inch of flat screen area can be scrubbed clean and inspected.

Because of the Lenz "Stacking" Disc design, it is possible to provide assemblies with filtering area ranging from 8 to more than 700 square inches by utilizing the four disc sizes shown in the table below (Dimension A)

These units may be ordered with 100, 60, or 30 mesh wire screen.
100 mesh stainless Cloth supplied unless otherwise specified.

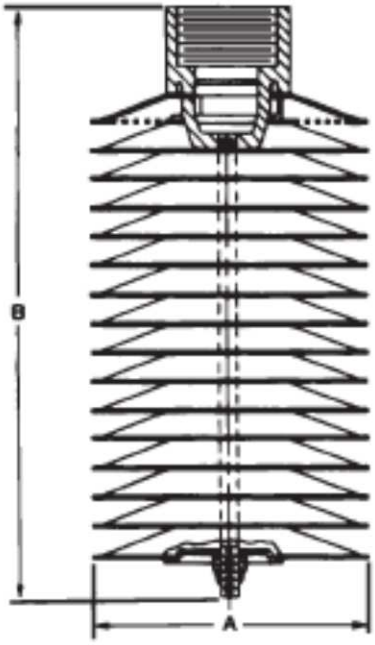

Standard Assemblies Available For Sump Application

100 Mesh Stainless Cloth Is Supplied Unless Otherwise Specified

MODEL NUMBER	GPM	PIPE SIZE NPT	DIMENSIONS		DISCS	FILTER AREA (SQ. IN.)
			A	B		
L75G5	5	3/4"	3 3/4"	4"	8	64"
L75G8	8	3/4"	3 3/4"	5 1/2"	12	96"
L100G10	10	1"	3 3/4"	7 3/8"	16	128"
L125G20	20	1 1/4"	4 1/4"	9 1/4"	21	214"
L150G30	30	1 1/2"	5"	9 3/8"	21	307"
L150G50	50	1 1/2"	5"	10 7/8"	25	365"
L200G60	60	2"	6"	7 7/8"	18	380"
L200G75	75	2"	6"	9 1/4"	22	464"
L250G85	85	2 1/2"	6"	10 1/8"	24	507"
L250G100	100	2 1/2"	6"	11 5/8"	28	591"

NOTE: area based on following: 8.0" sq. in. per 3.75" disc / 10.2" sq. in. per 4.25" disc 14.6" sq. in. per 5" disc / 21.1" sq. in. per 6" disc.*

Low Disc Strainers

Model D

MODEL NUMBER	PIPE SIZE NPT	B HEIGHT	DISCS	AREA SQ. IN.
37-D-1	3/8"	1"	1	8"
37-D-2	3/8"	1 3/8"	2	16"
37-D-3	3/8"	1 3/4"	3	24"
50-D-1	1/2"	1 1/8"	1	8"
50-D-2	1/2"	1 1/2"	2	16"
50-D-3	1/2"	1 7/8"	3	24"
50-D-5	1/2"	2 5/8"	5	40"
75-D-3	3/4"	2 1/4"	3	24"
75-D-4	3/4"	2 5/8"	4	32"
75-D-5	3/4"	3"	5	40"
100-D-6	1"	3 5/8"	6	48"
100-D-7	1"	4"	7	56"

A = 3 3/4" Diameter

Low in price, these compact strainers are designed for low oil levels and small tanks found in scissor lifts, lift trucks, and other applications where efficiency counts most. They are perfect for shallow tanks, work well in fluid levels as low as 3/4".

- Available on special order: 6" dia. discs which have 21.1 sq. in. screen area per disc. 3/4" or 1" NPT pipe size.

NOTE:* 8.0 sq. in. per 3 3/4"

See Pg. 42a for view of screen

Phone: 937/277-9364 FAX: 937/277-6516 www.lenzinc.com

Disc Sump Strainers/Magnetic Types

Magnetic Disc Sump Strainers

Model ML-G

Lenz Model ML-G Strainers add magnetic separation to the efficient straining action of the stacking disc design. Powerful Alnico magnets attract iron particles to the disc covers and away from the stainless screen. Oil passing through the center of the magnets gets a secondary cleaning action. The magnets are an integral part of the assembly, not just an add-on feature. Meets J.I C. specifications calling for magnetism in hydraulic systems. Die cast aluminum pipe adapters effectively isolate Lenz Magnetic Disc Sump Strainers from steel intake piping. When the unit is disassembled, the iron particles simply drop off the disc covers. These units may be ordered with 100, 60, or 30 mesh wire screen.
(See Pg.43a for mesh sizes)

Dimensional Details

MODEL NUMBER	GPM	PIPE SIZE NPT	DIMENSIONS		MAGNETS NO. & DIA.	DISC	FILTER AREA* (SQ. IN.)
			A	B			
ML75G5	5	3/4"	3 3/4"	5"	1–2"	8	64"
ML75G8	8	3/4"	3 3/4"	6 1/2"	1–2"	12	96"
ML100G10	10	1"	3 3/4"	9 3/8"	2–2"	16	128"
ML125G20	20	1 1/4"	4 1/4"	11 1/4"	2–3"	21	214"
ML150G30	30	1 1/2"	5"	11 3/8"	2–3"	21	307"
ML150G50	50	1 1/2"	5"	13 7/8"	3–3"	25	365"
ML200G60	60	2"	6"	10 1/8"	2–3"	18	380"
ML200G75	75	2"	6"	11 5/8"	2–3"	22	464"
ML250G85	85	2 1/2"	6"	12 3/8"	2–3"	24	507"
ML250G100	100	2 1/2"	6"	14 7/8"	3–3"	28	591"

NOTE: *area based on following: 8.0 sq. in. per 3 3/4" disc ▪ 10.2 sq. in. per 4 1/4" disc ▪ 14.6 sq. in. per 5" disc ▪ 21.1 sq. in. per 6" disc

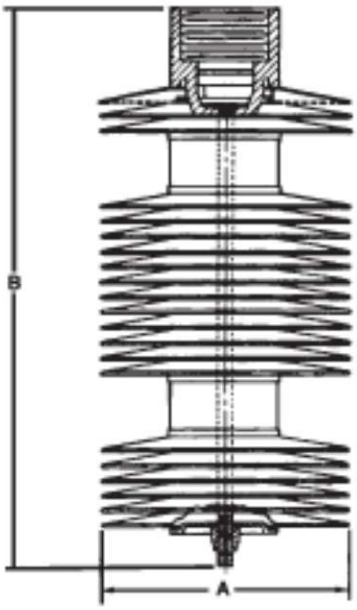

Magnetic Low Disc Strainer

Model MD

Lenz Model M D Strainers combine magnetic separation and low profile disc construction. A cylindrical magnet mounted between discs makes a concentrated magnetic field through which all oil passes.

- Available on special order: 6" dia. discs which have 21.1 sq. in. screen area per disc. 3/4" or 1" NPT pipe size.

MODEL NUMBER	PIPE SIZE NPT	B HEIGHT	DISCS	AREA* (Sq. In.)
37MD1	3/8"	2"	1	8"
37MD2	3/8"	2 3/8"	2	16"
37MD3	3/8"	2 3/4"	3	24"
50MD1	1/2"	2 1/8"	1	8"
50MD2	1/2"	2 1/2"	2	16"
50MD3	1/2"	2 7/8"	3	24"
50MD5	1/2"	3 5/8"	5	40"
75MD3	3/4"	3 1/4"	3	24"
75MD4	3/4"	3 5/8"	4	32"
75MD5	3/4"	4"	5	40"
100MD6	1"	4 5/8"	6	48"
100MD7	1"	5"	7	56"

A = 3 3/4" Diameter

See Pg. 42a for view of screen

Return Line Sump Diffusers
Disc Types

Prevents Oil From Foaming

Model R

Return Line Sump Diffusers are used to reduce the velocity of oil returning from the hydraulic system and are installed on the end of the return line, inside the reservoir. A velocity of 1 foot per second or less is desirable to prevent foaming and channeling of the hot oil.

Lenz Disc Type Sump Diffusers are designed to slow down and spread out the returning oil, to mix with remaining cool oil in the sump. Specify 8 or 30 mesh wire cloth in these assemblies.

Dimensional Details

MODEL NUMBERS	PIPE SIZE	GPM	A DIAMETER	B HEIGHT
75R2	3/4"	25	3 3/4"	1 3/4"
100R3	1"	40	3 3/4"	2 1/2"
125R3	1 1/4"	50	4 1/4"	2 9/16"
150R3	1 1/2"	60	5"	2 5/8"
150R4	1 1/2"	80	5"	3"
200R3	2"	90	6"	2 3/8"
200R4	2"	115	6"	2 3/4"
250R4	2 1/2"	115	6"	3"

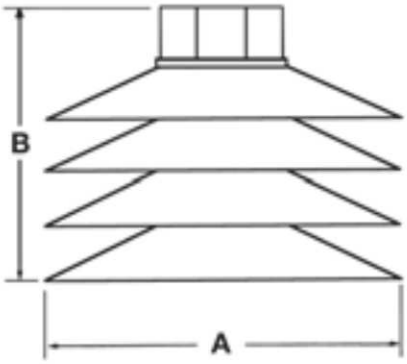

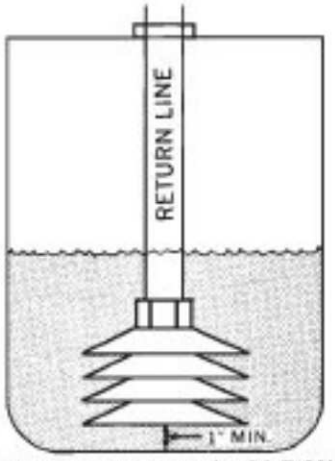

TYPICAL MOUNTING POSITION

(View of disc screen)

Phone: 937/277-9364 FAX: 937/277-6516 www.lenzinc.com

FILTERS – ACTUAL SIZE MESH

LENZ Cleanable Wire Cloth Filters are equipped with Stainless Steel Wire Cloth Elements. The filtering insert elements are available from a coarse 30 mesh up to a fine 200 mesh. To better illustrate mesh sizes, we have shown below the actual size mesh of the 100, 80, 50, 50, 40, and 30 mesh stainless steel wire screen. We have 10 and 25 micron pleated paper elements as well as 10 micron synthetic available.
We stock the 200, 100, 60, and 30 Stainless Steel Wire Mesh Screen. (100 Mesh—Standard)

200 MESH
Wire diameter .0021
Width of opening .0029
Microns = 74
33.6% of open area

150 MESH
Wire diameter .0026
Width of opening .0041
Microns = 105

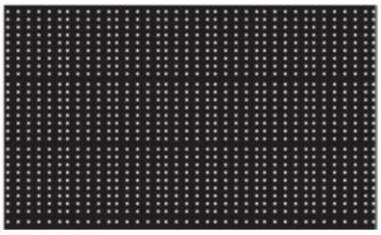

50 MESH
Wire diameter .0080
Width of opening .0120 = 308 Microns

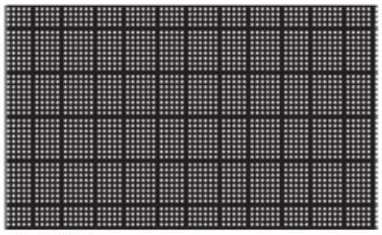

40 MESH
Wire diameter .0100
Width of opening .0150 = 385 Microns

100 MESH
Wire diameter .0045
Width of opening .0055 = 141 Microns
30.3% of open area

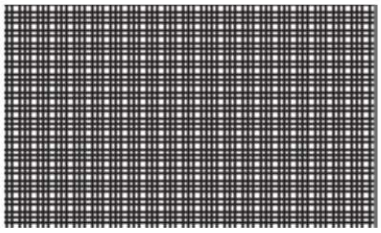

30 MESH
Wire diameter .0120
Width of opening .0213 = 546 Microns
44.8% of open area

80 MESH
Wire diameter .0055
Width of opening .0070 = 180 Microns

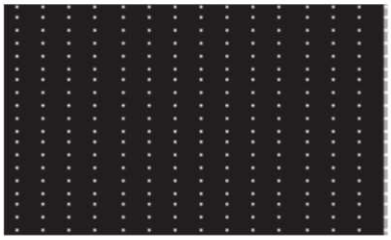

60 MESH
Wire diameter .0065
Width of opening .0102 = 262 Microns
37.5% of open area

$$\beta_X = \frac{\text{Number of Particles greater than X microns upstream}}{\text{Number of particles greater thatn X Microns downstrem}}$$

$$\beta_5 = 10/1 = 10$$

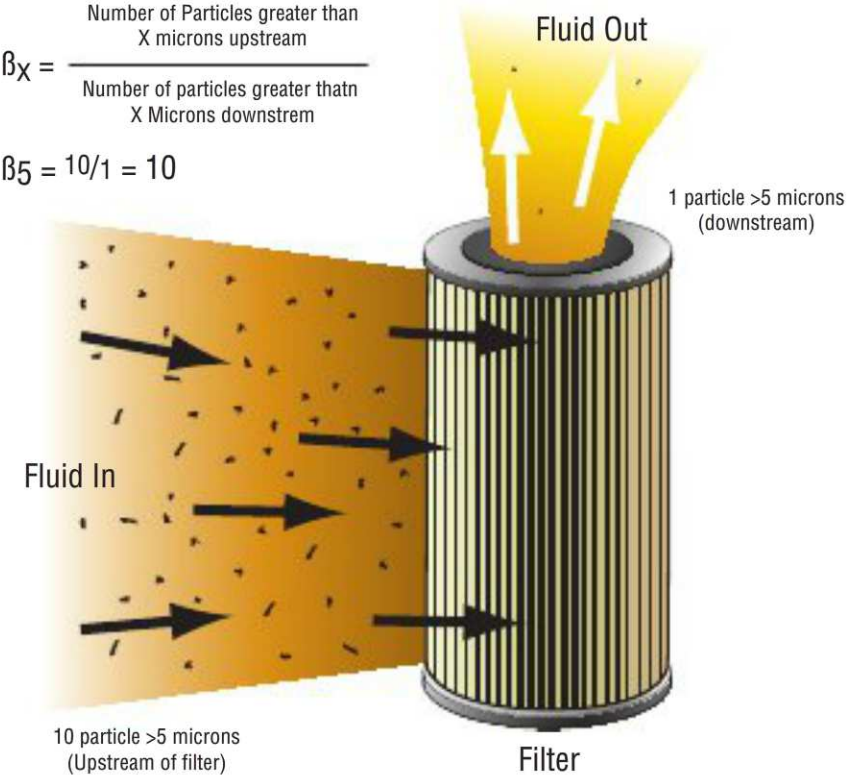

Notes

TECHNICAL BULLETINS ON THE WEBSITE AT WWW.LENZINC.COM

TB.FIL01.708	Lenz CP-1281 Gasket Installation Instruction
TB.FIL02.708	Lenz Contamination Control Information
TB.FIL03.708	Cleaning Wire Mesh Elements
TB.FIL04.708	Lenz Private Label Program
TB.FIL05.708	Spin On Filter Installation Instructions
TB.FIL06.708	LIT 1250-R Filter Riser
TB.FIL07.708	LIT-750-R Risers
TB.FIL08.708	LITB Filter Installation
TB.FIL09.708	Lenz Media Information
TB.FIL10.708	Filtration Range
TB.FIL11.708	Compares Cellulose & Synthetic Media
TB.FIL12.708	Dirt Holding Capacity / Standard Wire Meshes
TB.FIL.13.708	Lenz Indicator Positions
TB.FIL15.708	Diffusers
TB.FIL16.708	CP Canister Filters
TB.FIL17.708	Strainers
TB.FIL18.811	Servicing DH Series Filters
TB.FIL19.811	Servicing Suction Strainers
TB.FIL20.811	Servicing Tank Mounted Filters
TB.FIL21.811	TIF Series Filter
TB.FIL22.811	TFRE Service Instructions
TB.FIL23.811	LIT Service Breakdown

TANK ACCESSORIES

FILLER BREATHERS
FILTER BREATHERS
DESICCANT BREATHERS
PRESSURIZED BREATHERS
FILL NECKS
PORT FLANGES
BALL VALVES
END COVERS

SIGHT GAUGES
SIGHT GLASSES
TANK MAGNETS
SUCTION & RETURN FLANGES
RUBBER BUSHINGS
VENT BREATHERS
DIPSTICKS
MAGNETIC PLUGS

Tank Accessories Table of Contents

Series	TANK ACCESSORIES	Section B Page	
XI Series	Extra Large Filler Breather	1b	New Model
XL-P	Extra Large Filler Breather	2b	New Model
FCS	Filler Breathers	3b	New Model
SM, LWR	Side Mount Breathers	4b	New Model
FC	Sealed, Emission Caps & Neck	5b	
HYD	Hydraulic Necks	6b	New Model
HDF	Diesel Necks	7b	
ABS, NY-B-2	Nylon Tank Breathers	8b	New Model
LGB	Air Filter Breathers	9b	New Model
FCSM, FCS	Mini & Large Capacity Breathers	10b	
BF	Metal Threaded Breathers	11b	
LMB, BF	Metal Threaded Breathers	12b	New Model
NY Series	Plastic Threaded Breathers	13b	
NYPF, LDP	Nylon Push Fit Breathers	14b	
LVB, NYPO	Nylon Vent Breathers	15b	New Model
NY-B	Plastic Bayonet Style Breathers	16b	New Model
DB	Dessicant Breathers	17b	
LRB	Rubber Bushings	18b	
TC	Tank Cleanout Covers	19b	
MDP, AMDP	Magnetic Plugs	20b	
SF, RF	Reservoir Flanges (Suction & Return)	21b	
LLG	Sight Level Gauge	22b	
550	Fluid Level Gauge	23b	
LSW, LSWA	Sight Windows	24b	
LSG, LSD	Oil Level Indicators	25b	New Model
1000-2000	Slim Line Magnetic Tank Cleaners	26b	
3000-4000	Multi Magnet Tank Cleaners	27b	
LHBV	High Pressure Ball Valves	28b	
LPBV, ABV	Low Pressure Ball & Air Bleed Valves	29b	
W43	Port Flanges	30b	
W4, W59	Port Flanges	31b	
W31, W3	Port Flanges	32b	
SF, SFX	Port Flanges	33b	
	Notes	34b	

Phone: 937/277-9364 FAX: 937/277-6516 www.lenzinc.com

Filler Breather Caps

Extra Large-Bayonet Style Filler Strainer Breather

Model 57XL

- 250 GPM or 35 CFM
- Keeps Reservoir Fluids Clean, Protects and Prolongs Hydraulic System Life!
- Each unit packaged in kit with instructions and template for drilling mounting holes.
- Strainer lengths, screen mesh and materials can be varied to meet special needs.
- SAE J829 Mounting Flange

57XL-40 | 57XL-40N | BPC- 57-XL-40

LC Option
Locking Cap

HN Option
High Neck

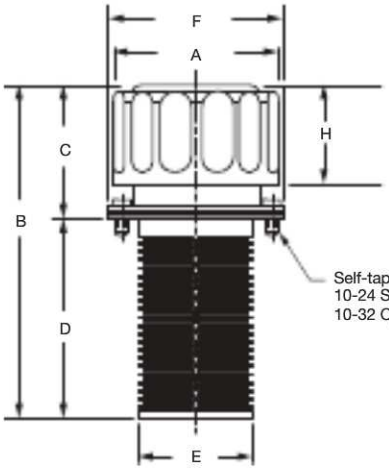

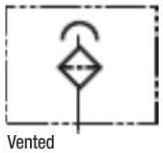

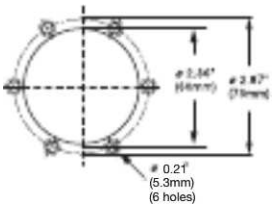

Dimensional Detail

MODEL NUMBER	MICRON	GPM	AIR FLOW		STANDARD A	B	C	D	E	F	G	H
57XL	3, 10, 40	250	35	IN	3"	5.3"	2.2"	3.8"	1.9"	3.3"	3"	1.5"
				MM	76	135	56	97	48	84	76	38

G = 3" Stainless Steel Screen

Assembly Ordering Code

- 57-XL - 40 - N - *

Zinc/Sealer	Omit (Standard)
LC	Locking Cap
ISO	Hydraulic Fluid (Stamped In Cap)
AS	Anti-Splash
BPC	Black Powder (Coated Cap/Flange)

57-XL Assembly

40	40	Micron
10	10	Micron
3	3	Micron

10-32	Self Tapping Screws
LCH	Less Chain
BUNA	Rubber Gasket
1.5 HN	1.5" High Neck
3 HN	3" High Neck
DIP	Specify Dipstick Length

Full, Add, Low, Marks Available
Custom Lengths available

Omit	3" 30 Mesh (Standard)
3-100	3" 100 Mesh
N	4" Nylon
6-30	6" 30 Mesh
6-100	6" 100 Mesh
8-30	8" 30 Mesh

Please supply drawing specifying lengths shown.
Dipstick may be marked "FULL" and "ADD".
Optional wording available.

DIP Option
Dipstick

Cap Only Ordering Code

- AS - 40 XL - LCH

Zinc/Sealer	Omit (Standard)
LC	Locking Cap
ISO	Hydraulic Fluid (Stamped In Cap)
AS	Anti-Splash
BPC	Black Powder (Coated Cap/Flange)

40XL	40 Micron
10XL	10 Micron
3XL	3 Micron

LCH	Less Chain
BUNA	Rubber Gasket
DIP	Specify Dipstick Length
OMIT	No Options

See website technical bulletin TB.TA11.708 for Anti Splash information.

Pressurized Filler Breather Cap

57XL-10P-5 / 57XL-40P-5

This device is similar to a conventional breather, but it incorporates a relief valve set at 5 PSI and a vacuum breaker. When the fluid level first falls, air enters the reservoir through the vacuum breaker and filter. When the level rises, air is compressed rather than being expelled. Thereafter, changing fluid levels are accommodated by the changing size of the air bubble in the reservoir, instead of by breathing to atmosphere.

Pressurized breathers can reduce breathing by as much as 90% increasing the life of the breather filter by a factor of 10. They are recommended for systems that are expected to operate in extremely dusty environments and mobile applications to prevent spillage.
Optional: 3 & 10 PSI Relief Valve Setting.
(SAE J829 Mounting Flange)

57XL-40-P5 BPC-57XL-40-P5

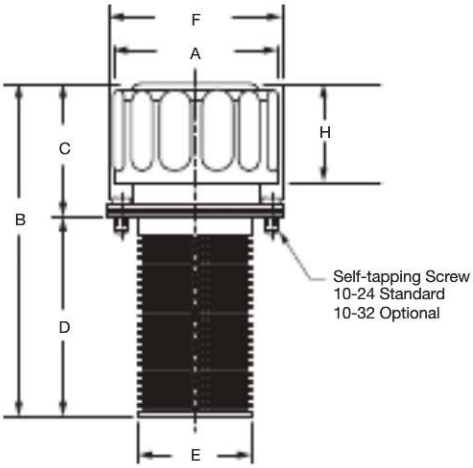

Pressurized Relief Valve
Double Valve

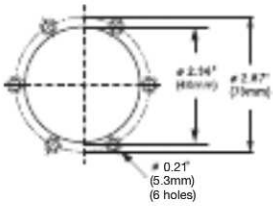

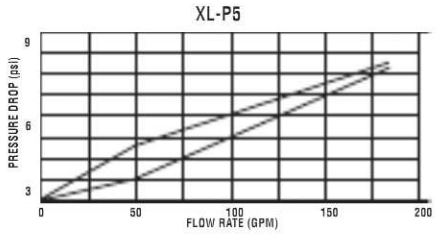

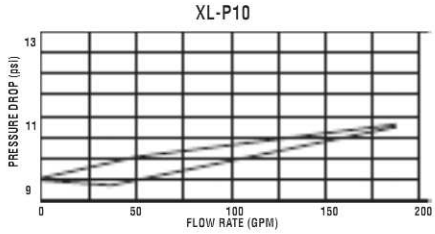

Dimensional Detail

MODEL NUMBER	MICRON	GPM	AIR FLOW	STANDARD	A	B	C	D	E	F	G	H
57XL	3, 10, 40	200	30	IN	3"	5.3"	2.2"	3.8"	1.9"	3.3"	3"	1.5"
				MM	76	135	56	97	48	84	76	38

G = 3" Stainless Steel Screen

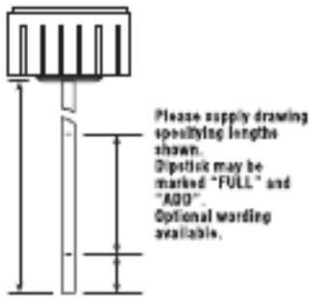

Assembly Ordering Code

- 57-XL - 40 - P5 - *

Zinc/Sealer	Omit (Standard)
LC	Locking Cap
ISO	Hydraulic Fluid (Stamped In Cap)
BPC	Black Powder (Coated Cap/Flange)

40	40 Micron
10	10 Micron
3	3 Micron

57-XL Assembly

10-32	Self Tapping Screws
LCH	Less Chain
BUNA	Rubber Gasket
1.5 HN	1.5" High Neck
3 HN	3" High Neck
DIP	Specify Dipstick Length

Full, Add, Low, Marks Available
Custom Lengths available

P-5	5 PSI Relief Valve
P-10	10 PSI Relief Valve
P-3	3 PSI Relief Valve
Omit	3" 30 Mesh (Standard)
3-100	3" 100 Mesh
N	4" Nylon
6-30	6" 30 Mesh
6-100	6" 100 Mesh
8-30	8" 30 Mesh

Cap Only Ordering Code

BPC - 40 XL - P5

Zinc/Sealer	Omit (Standard)
LC	Locking Cap
ISO	Hydraulic Fluid (Stamped In Cap)
BPC	Black Powder (Coated Cap/Flange)

40XL	40 Micron
10XL	10 Micron
3XL	3 Micron

P-3	3 PSI Relief Valve
P-5	5 PSI Relief Valve
P-10	10 PSI Relief Valve
LCH	Less Chain
DIP	Dipstick (Specify Length)
Buna	Rubber Gasket

See website technical bulletin TB.TA10.708 for Pressurized information.

Phone: 937/277-9364 FAX: 937/277-6516 www.lenzinc.com

Filler Breather Caps

Bayonet Style Filler Strainer Breather

Model FCS (40 or 10 Microns)

- 180 GPM or 26.7 CFM
- Keeps Reservoir Fluids Clean, Protects and Prolongs Hydraulic System Life!
- Each unit packaged in kit with instructions and template for drilling mounting holes.
- Strainer lengths, screen mesh and materials can be varied to meet special needs.
- Zinc Plated
- SAE J829 Mounting Flange

Dimensional Detail

MODEL NUMBER	MICRON	GPM	AIR FLOW	STANDARD	A	B	C	D	E	F	G
FCS-537-W	10, 40	180	26.7	IN	2.6"	4.8"	1.8"	3.8"	1.9"	3.3"	3"
				MM	66	121	46	97	48	84	76
FCS-537	10, 40	180	26.7	IN	2.6"	4.8"	1.8"	3.8"	1.9"	3.3"	3"
				MM	66	121	46	97	48	84	76
FCS-557	N/A	0	0	IN	2.5"	4"	1"	3.8"	1.9"	3.3"	3"
				MM	64	102	25	97	48	84	76
FCS-557-V	N/A	0	0	IN	2.5"	4"	1"	3.8"	1.9"	3.3"	3"
				MM	64	102	25	97	48	84	76

G = 3" Length Basket
557-V has 2 vent holes .06" in diameter each

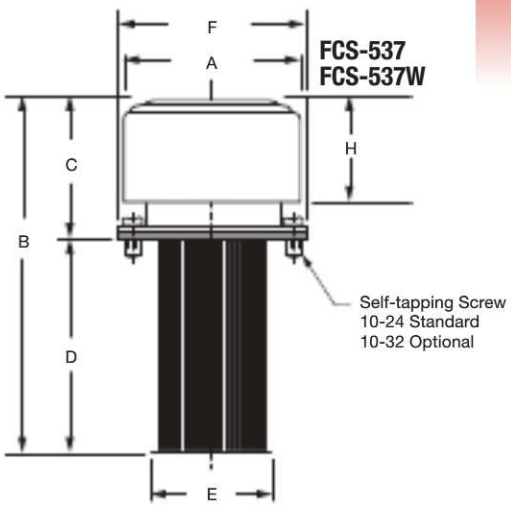

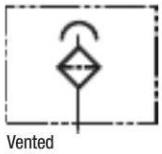

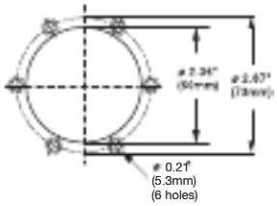

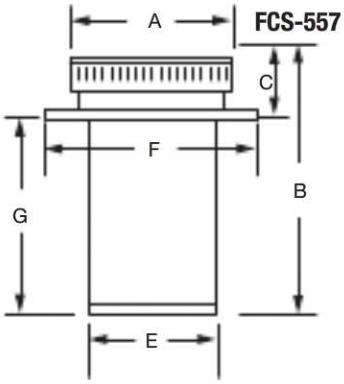

Assembly Ordering Code

*** - FCS - 537 - 40 - N - ***

Omit	(Standard)
BPC	Black Powder

FCS 537	(Standard)
FCS 537 W	Weatherproof
FCS 557	Non Vent
FCS 557 V	Vented
FCS 547	FCS 537-LCH
FCS 547 W	FCS 537W-LCH

Omit	(40 Micron)
10	(10 Micron)

*E	Ethanol Seal
BUNA	Rubber Gaskets
1.5 HN	1.5" High Neck
3 HN	3" High Neck
DIP	Specify Dipstick Length
10-32	Self Tapping Screws

Full, Add, Low, Marks Available
Custom Lengths available

Omit	3" 30 Mesh (Standard)
N	4" Nylon
3-100	3" 100 Mesh
6-30	6" 30 Mesh
6-100	6" 100 Mesh
8-30	8" 30 Mesh

Cap Only Ordering Code

*** – 3W – 10 – ***

Zinc/Sealer	Omit (Standard)

3W	Weatherproof
3	(Standard)
4W	Weatherproof
4	(Standard)
5NV	Non-Vented
5V	Vented

40	(Omit)
10	(10 Micron)
LCH	Less Chain
DIP	Dipstick
*E	Ethanol Seal

Special seal for ethanol avaiable on 5, 5NV Caps (add E to suffix)

Side Mount Filler Cap Assemblies

Filler Strainer Breather

Model SM

Filters, Breathes and Strains - Makes hydraulic fuel tank customizing easier. Designed for use on tanks that require filling from the end or side. Choice of standard or weather-proof cap (same as Model FCS) at no extra charge.
Fully assembled and ready to mount. Includes instructions and template.
May also be welded directly to side of reservoir.
Lenz Quality Standards - Heavy-duty design, one-piece housing is of steel. Six bolts with nuts and seals and mounting gasket are included. All other components and specifications are identical to those for Lenz Standard FCS Model or 57XL (Page 1b). Zinc or black powder coated oxide finish optional at additional cost. Separate housings, SMW unplated, are also available.

SM-57XL-40

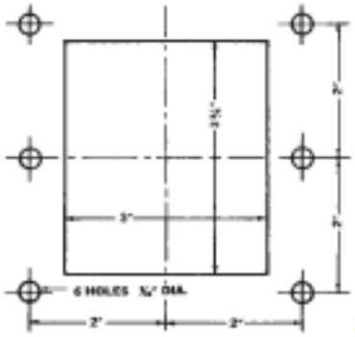

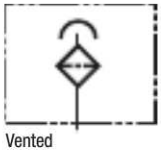

Vented

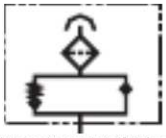

Pressurized Relief Valve
Double Valve

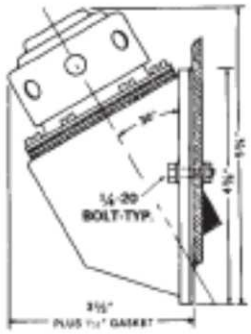

SM-537

Assembly Ordering Code

SM - 57XL - 40 - 3 - 100 - *

Omit	(Standard)
SM	Side Mount
WO-SM	Weld On

Zinc Sealer	Omit (Standard)
LC	Locking Cap
ISO	Hydraulic Fluid (Stamped In Cap)
AS	Anti-Splash
BPC	Black Powder (Coated Cap/Flange)

40	40 Micron
10	10 Micron
3	3 Micron

57-XL Assembly

LCH	No Chain
BUNA	Rubber Gasket
1.5 HN	1.5" High Neck
3 HN	3" High Neck
DIP	Specify Dipstick Length

Full, Add, Low, Marks Available
Custom Lengths available

Omit	3" 30 Mesh (Standard)
3-100	3" 100 Mesh

SM Requires mounting hardware
UNP-SMW-NH has no mounting holes
and is non-plated weld on bracket

Assembly Ordering Code

SM - 537 - * - * - *

Omit	(Standard)
SM	Side Mount
WO-SM	Weld On

537	(Standard)
537 W	Weatherproof
557	Non Vent
557 V	Vented

Omit	(40 Micron Std.)
10	(10 Micron)

BUNA	Rubber Gaskets
1.5 HN	1.5" High Neck
3 HN	3" High Neck
DIP	Specify Dipstick Length

Full, Add, Low, Marks Available
Custom Lengths available

Omit	3" 30 Mesh (Standard)
3-100	3" 100 Mesh

Weld Neck Risers

Model LWR

The "LWR" series Weld Neck Risers are designed to raise filler breather assemblies up to 1" above the surface of the tank top. This low cost riser eliminates costly repairs brought on by contamination and water being swept into the reservoir.

MODEL	MATERIAL	HEIGHT
LWR-1	Steel	1 1/16"
LWR-1-ALUM	Aluminum	1 1/16"
LWR-1-SS	304 Stainless Steel	1 1/16"

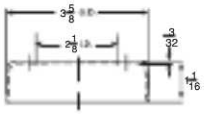

Phone: 937/277-9364 FAX: 937/277-6516 www.lenzinc.com

EPA Sealed Emissions Caps & Necks

Model FC Cap & FN Series necks

- EPA carb compliant
- Anti-splash self closing flap on fuel neck available
- Tethered audible cap FC-1 SAE J1114 threads
- Tested to a positive 3.5 PSIG (24.5 KPA) or vacuum pressure of .1 PSIG (.7 KPA)
- No need to change the cutout openings in your fuel tank

Option

- Diesel version with open bottom available

Weld Neck Models

FN270 Diesel
FN270-FL (Flapper) Fuel

Weld Neck Models

FN3HN Diesel
FN3HN-FL (Flapper) Fuel

FL suffix specifies Neck with Fuel Insert

FC-1 & FN-270-FL

FN-3HN-FL

FN-3HN-FL

(FL) Fuel Insert (Bottom)

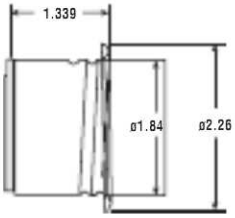

(FL) Fuel Insert (Side View)

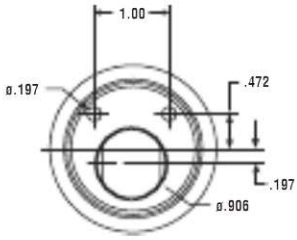

(FL) Fuel Insert (Top)

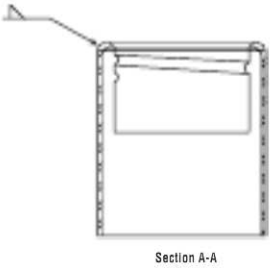

FN270-FL

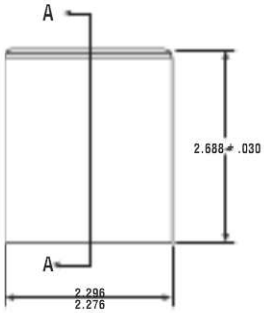

FN270

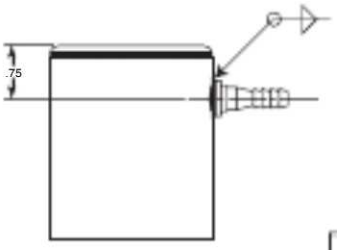

FN270-FL-OF
FN270-OF

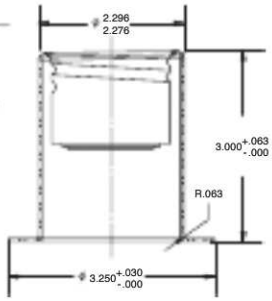

FN3HN-FL

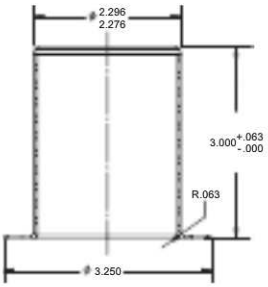

FN3HN

CARB (California Air Resource Board) SORE (Small Off-Road Engine) regulations Fuel Cap Performance Standards 40CFR 1060.245

A) Fuel cap must be permanently tethered to the tank, equipment, or engine

B) Fuel cap must be designed to provide physical and/or audible feedback to the user that a fuel tank vapor seal is established.

C) Use a tethered or self closing gas cap on a fuel tank that stays sealed up to a positive pressure of 3.5 PSI or vacuum pressure of 1 PSI.

D) The FC-1 tethered fuel cap has a low permeation seal gasket which threads unto FN series necks and these two components become a part of the customer's C.A.R.B. tank system certification.

E) The FN270-OF series of necks has 1/4" hose barb stem provison for adding hose for a carbon canister or other device.

Hydraulic Filler Necks & Caps

Lenz Hydraulic Filler Caps & Necks are fabricated of heavy gauge steel with an optional stainless steel screen.
Caps are available in standard or lockable, non-vented or vented.

Hydraulic Fill Necks

HYD Series-Hydraulic Applications

- 16 gauge (.060) steel not plated
- Tube extension .12 wall thickness, 2.21 diameter
- Standard 1.3", 3", 6" & 8" length tube extension
- Tube extension not plated / Safety chain standard
- SAE J829 Mounting Flange

HYD-406
(Neck Only / Caps Ordered Separately)

LC-HYD-406
(Neck Only / Caps Ordered Separately)

ex. HYD-403-4.5
(Neck Only / Caps Ordered Separately)
Shown with 5NV Cap

ex. HYD-403-4.5
(Neck Only / Caps Ordered Separately)
Shown with BPC-40XL Cap

Options

- Stainless steel, aluminum available
- Angle tube cutoffs / lockable tab available
- Stainless steel screen std. 4.5" 40 mesh
- Overflow tube available
- Threaded & flanged connection available
- SR option is neck with screen retainer, to allow neck to be welded, order screen separately if required
- 4.5 option the screen is assembled to the neck

Dimensional Detail

MODEL NUMBER		A	Optional Screen B	Length C	D	E	Wall F
HYD-125	IN	N/A	N/A	1.25	N/A	2.2	0.06
	MM	N/A	N/A	32	N/A	53	15
HYD-270	IN	N/A	N/A	2.7	N/A	2.2	0.06
	MM	N/A	N/A	69	N/A	53	15
HYD-403	IN	1	4.5	3	1.2	2.2	0.12
	MM	25	114	76	30	53	3
HYD-406	IN	1	4.5	6	1.2	2.2	0.12
	MM	25	114	152	30	53	3
HYD-408	IN	1	4.5	8	1.2	2.2	0.12
	MM	25	114	204	30	53	3
HYD-4**	IN	1	4.5	N/A	1.2	2.2	0.12
	MM	25	114	N/A	30	53	3

3", 6" & 8" stock length. Mark up drawing and fax for quotation.

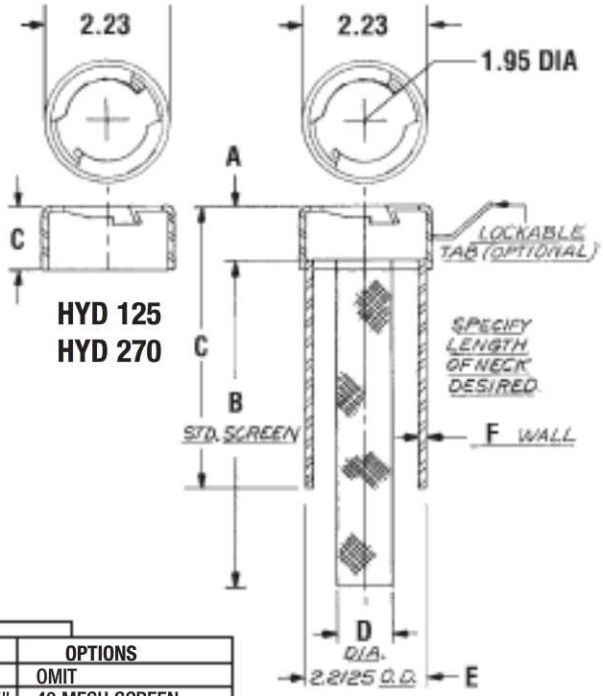

Ordering Code

LC — * — HYD — 406 — 4.5

LOCK OPTIONAL	
LC	LOCKABLE
OMIT	

MATERIAL	
OMIT	STEEL
SS	STAINLESS
ALUM	ALUMINUM

SERIES
HYD

NECK LENGTHS	
1.3	1.3"
403	3"
406	6"
408	8"
	SPECIFY

	OPTIONS
	OMIT
4.5"	40 MESH SCREEN
52°	ANGLE OF CUT (50 PIECE MIN.)

**Caps ordered separately see page 1b, 2b and 3b for cap only ordering options.*

Replacement Fill Screen is HYD-4.5

HYD-4.5

HYD-125

HYD-125-Alum

HYD-125 BEAD

HYD-270

*HYD-4**-FL*

Stainless Steel Note:
The neck is 321 deep drawing 2B or 2D per MIL-S-6721
The tube is 304/304L per ASTM-A269/249
*Aluminum neck is 3003-0 Tempered

Phone: 937/277-9364 FAX: 937/277-6516 www.lenzinc.com

Diesel Filler Necks & Caps

Lenz Fuel/Diesel Filler Caps & Necks are fabricated of heavy gauge steel with an optional stainless steel screen. Fuel Caps are available in standard or lockable, non-vented or vented – the vented Fuel Caps having a built-in diaphragm or deflector to reduce spillage.

LC-HDF-1.3 HDF-606-4.5 LC-HDF-606-4.5

Diesel Fill Necks

HDF Series-Diesel Fuel Applications

- 16 gauge (.060) steel
- Tube extension .12 wall thickness, 2.56 diameter
- Standard 3", 6" & 8" length tube extension
- Use Lenz 6V and LC-6V series vented caps
- Tube extension not plated
- Safety chain standard
- Stainless steel screen 40 mesh std.

Options

- Stainless steel, aluminum available
- Angle tube cutoffs / Lockable tab available
- Stainless steel screen std.. 4.5" 20 mesh
- Overflow tube available
- Dipstick available
- Non vented 6NV, LC-6NV
- SR option is neck with screen retainer, to allow neck to be welded, order screen separately if required
- 4.5 option the screen is assembled to the neck

MODEL NUMBER		A	B (Screen)	C (Length)	D	E	F (Wall)
HDF-1.3	IN	1.3"	4.5"		1.5"	2.6"	0.12"
	MM	37	114		38	66	3
HDF-603	IN	1.44"	4.5"	3"	1.5"	2.6"	0.12"
	MM	37	114	76	38	66	3
HDF-606	IN	1.44"	4.5"	6"	1.5"	2.6"	0.12"
	MM	37	114	152	38	66	3
HDF-608	IN	1.44"	4.5"	8"	1.5"	2.6"	0.12"
	MM	37	114	204	38	66	3
HDF-6**	IN	1.44"	4.5"		1.5"	2.6"	0.12"
	MM	37	114		38	66	3

3", 6" & 8" Stock length. Mark up drawing and fax for quotation.
Replacement fill screw HDS-4.5

Diesel Caps

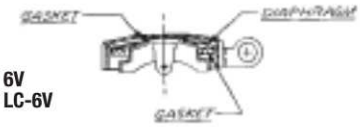

6NV / 6V
LC-6NV / LC-6V

Diesel Neck "HDF"

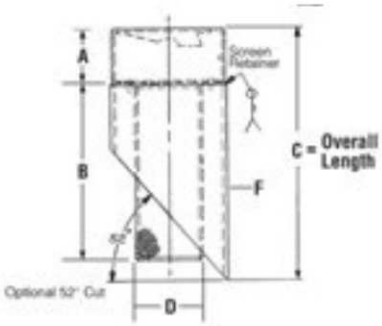

For side mounting on tank.

LC-Lock Drawing

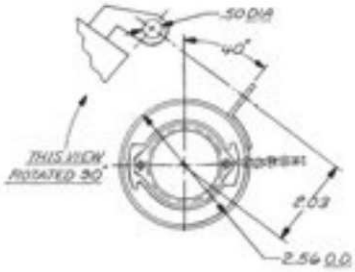

Caps ordered separately see below page 7b for cap only ordering options.
Replacement Fill Screen is HDS 4.5 (40 mesh)
Non-vented Caps tested to 10 PSI
Replacement Fill Screen is 4.5 20M (20 Mesh)

Stainless Steel Note:
The neck is 30L/304 deep drawing
The tube is 30L/304 per ASTM-A269/249

LC-HDF-606-52-4.5
w/ LC-6V
LC-HDF-6

LC-HDF-606
W/ LC-6V

LC-HDF-603-4.5
W/ LC-6V

LC-HDF-OF

LC-6V Cap only

Ordering Code

LC — * — HDF — 606 — 4.5

LOCK OPTIONAL
LC
OMIT

OMIT	STEEL
SS	STAINLESS
ALUM	ALUMINUM

SERIES
HDF

NECK LENGTHS	
1.3	1.3"
603	3"
606	6"
608	8"
6**	SPECIFY

OPTIONS	
OMIT	
4.50	40 MESH SCREEN
52°	ANGLE OF CUT (6" Minimum)
LCH	LESS CHAIN
4.5 - 20M	20 MESH SCREEN

Cap Ordering Information

MODEL	CAP DIAMETER	ANTI SLOSH DEFLECTOR	VENT	LOCK TAB	CHAIN HOOK	DIPSTICK
6V	2.88	YES	(2).040 HOLES	NO	OPTIONAL	OPTIONAL
LC-6V	2.88	YES	(2).040 HOLES	YES	OPTIONAL	OPTIONAL
6NV	2.88	YES	NON-VENT	NO	OPTIONAL	OPTIONAL
LC-6NV	2.88	YES	NON-VENT	YES	OPTIONAL	OPTIONAL

**Dipstick option minimum 25 pcs.*

Filler Breather Tank-Top Mount

Model ABS-40/ABS-30

PART	DESCRIPTION	GPM	CFM
ABS-40	40 Micron - Polymide 66-Nylon	79	10
ABS-30	40 Micron - Polymide 66-Nylon	26	4

Filler Breather for tank-top installation with breather and strainer basket. Filler Breather Cap has internal thread, and screws onto the main body, located in the tank.

This filler breather assembly contains a 40 Micron breather cap, a snap locking ring on main body, a threaded locking ring with "O" ring seal, and strainer basket.

Main body is placed in a pre-drilled hole 2.16" (55 mm) minimum, 2.18" (55.3) maximum in the top of reservoir (tank). The wall thickness must not exceed .3149" (8 mm) 10 gauge and not less than .0781" (2 mm). The threaded locking ring with "O" ring, secures and seals the main body to the tank.

Safety chain is standard, which connects the cap to the body, preventing loss of cap when removed.

With this filler breather assembly, drilling, tapping and aligning of mounting holes is not needed, reducing labor costs.

ABS-40

ABS-30

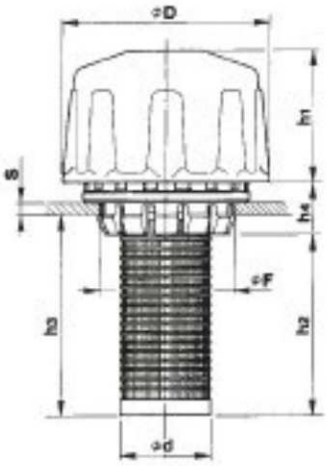

ABS-40

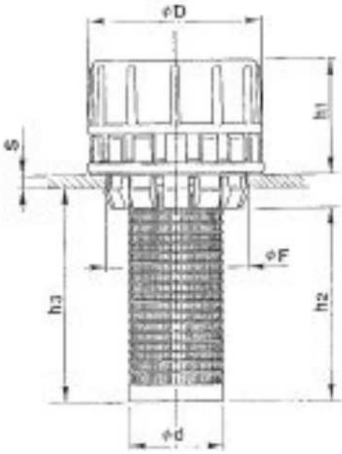

ABS-30

Dimensional Detail

MODEL		D	h2	d	h1	h4	F	h3	S
ABS-40	IN	3.5	3.1	1.5	2.2	0.8	2.2	3.5	.1-.3"
	MM	88	80	38	55	21	55	88	2-8mm
ABS-30	IN	2.8	3.1	1.5	1.9		2.2	3.5	.1-.3"
	MM	70	80	38	47		55	88	2-8mm

Standard "O" Ring 55 I.D. x 3 mm Cross Section

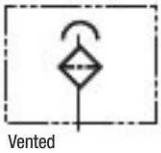

Vented

Filler Breather Threaded Mount

Model NY-B-2-300

- Filler Breathers constructed from thermoplastic resin (polyamide 66) designed for use on small and medium reservoir from 25 to 100 litres; they are equipped with BR bronze sintered air filter (30 micron) and with a zinc plated steel filter strainer to protect the reservoir (C = 50 mesh)
- Black cap with graphic symbol fill oil
- The thread connections is G = 1" BSP and filling is achieved by removing the top of the assembly

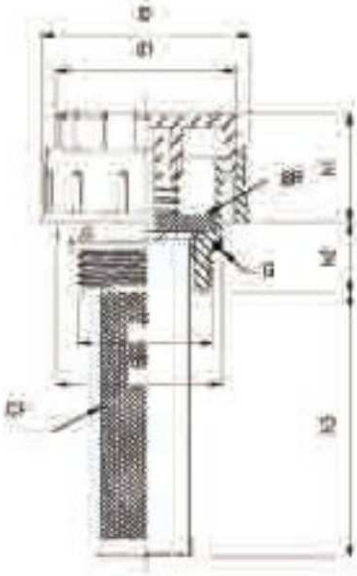

Dimensional Detail

MODEL		D	d1	h1	h2	h3
NY-B-2-300	IN	2.06	1.77	1.06	.67	2.56
	MM	52.5	45	27	17	65

Order WF-16B for weld flange to install breather

Optional all stainless unit is available

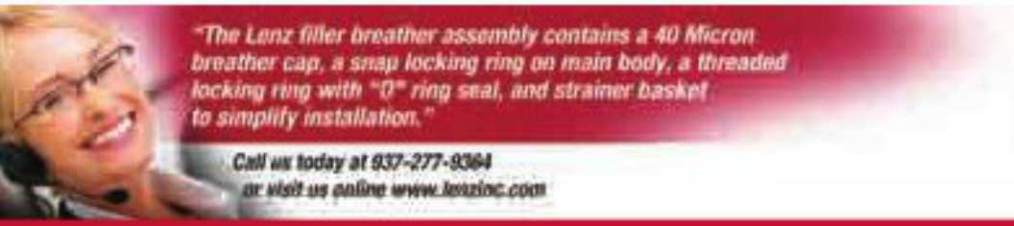

LGB Air Breathers

Threaded / Bayonet Flange

Model LGB

- White metal filter canister
- Zinc plated steel adapter
- Air flow to 200 CFM (1125 GPM)
- Compatible with most fluids
- Temperature to 250° F (121° C)
- 1/2", 3/4", 1", 1 1/4" NPT Threads (Optional threads available; Consult Factory)

Options:

- 10 micron glass media
- 10 or 25 cellulose media

LGB-B7-10

LGB-B-310
(Replacement Breather)

LGB-12-10 Assembly
** Comes with flange, gasket, screen & mounting screws*

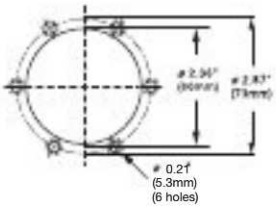

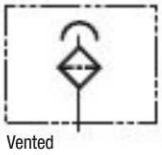

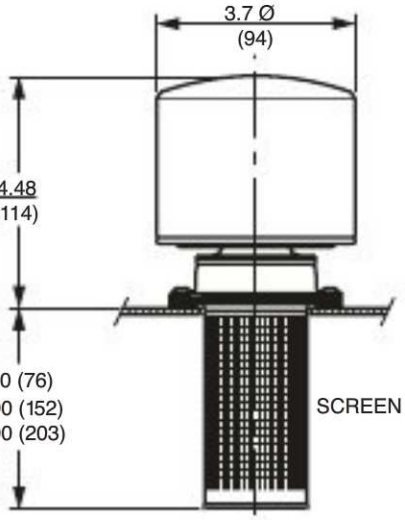

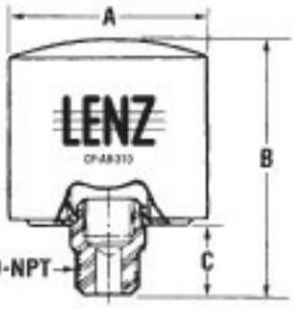

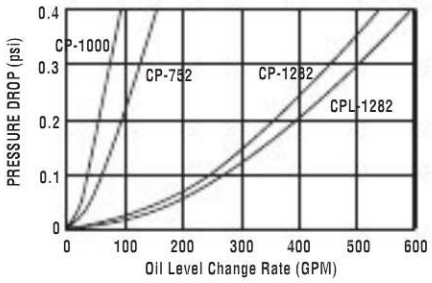

Based upon pressure drop 5 inches of H20 (.18 PSID) through clean element

Dimensional Detail

TANK BREATHER ADAPTER	LENGTH C	THREAD D	ELEMENT SERIES	A	B	GPM	CFM
LABA-8-8	1.0	1/2" NPT	CP10***	3.0	4.4	60	8.0
LABA-8	1.5	1/2" NPT	CP-752-**CPL-752	3.8	7.1	215	30
LABA-12-16	1.2	3/4" NPT	CP-AB-310	3.7	4.9	215	30
B12	1.0		CP-AB-310	3.7	4.7	215	30
LABA-12	1.5	3/4" NPT	CP-752-**	3.8	7.1	250	35
LABA-16	1.5	1" NPT	CP-752-**	3.8	7.1	250	35
LABA-20	1.5	1 1/4" NPT	CP-1282-**	4.8	9.4	850	110

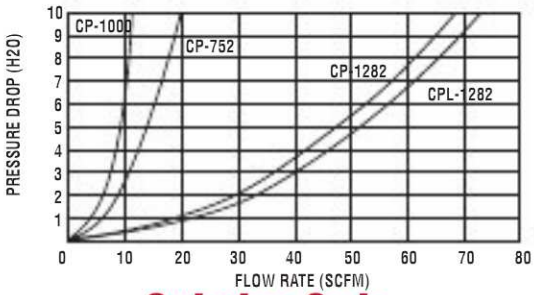

Ordering Code

LGB — 12 — 10

LGB BREATHERS

PORT	SIZE	ELEMENT SERIES
8	1/2" NPT	CP-752
8-8	1/2" NPT	CP-1000
12	3/4" NPT	CP-752
12-16	3/4" NPT	CP-AB-310
16	1" NPT	CP-752
20	1 1/4" NPT	CP-1282

MICRONS
3
10
10
25
25
10SYN
10WR

* Check element availability on pages 1a, 5a, 7a

Ordering Code

LGB — B128 — 10 — N

LGB BREATHERS

PORT	SIZE	ELEMENT SERIES
B7	BAYONET	CP-752
B128	BAYONET	CP-1282
B	BAYONET	CP-AB-310

MICRONS
3
10
10
25
25
10SYN
10WR

OPTIONS	
Omit	3" 30 Mesh (Std)
3-100	3" 100 Mesh
N	4" Nylon
6-30	6" 30 Mesh
6-100	6" 100 Mesh
8-30	8" 30 Mesh

* Check element availability on pages 1a, 3a, 5a

Filler Breather Mini Cap

Filler Strainer Breather

Model FCS-M

- Zinc plated steel cap
- 30 mesh basket
- 3 10-32 x 1/2" self tapping screws for flange mount
- Cork Neoprene Gaskets
- Air flow to 10 CFM (30M /MIN)
- For use with petroleum based fluids, high water glycols and water/oil emulsions

Options

- 10 or 40 micron foam elements

Mounting Information

- 1.18 dia. screen hole w/(3) .156 dia holes equally spaced on a 1.63 dia. B.C.

FCS-M

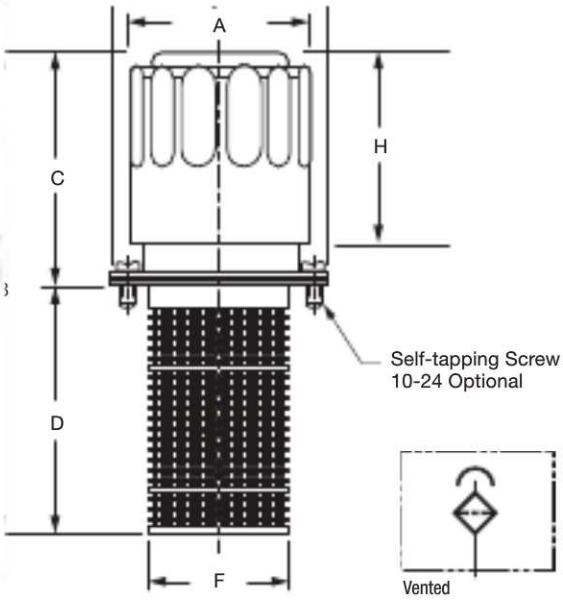

Dimensional Detail

MODEL	MICRON RATING	DISPLACEMENT GPM	AIRFLOW CFM		A	B	C	D	E	WEIGHT LB/KG
FCS-M	40	71	10	IN	1.8	1.6	1.9	2.6	1.1	.29
				MM	45	42	49	66	28	.13
FCS-10M	10	36	5	IN	1.8	1.6	1.9	2.6	1.1	.29
				MM	45	42	49	66	28	.13

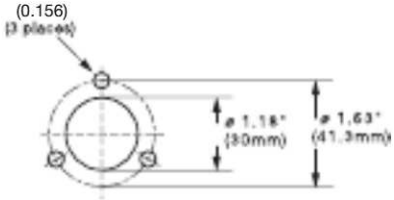

Super Filler Cap Assembly

Model FCS-1303

- Plated steel cap (non-vented)
- 6-8/32" self tapping screws for flange mount
- Cork gaskets
- 4 15/16" (125 mm) diameter bolt circle
- For use with petroleum based fluids, high water glycols and water/oil emulsions

Options

- 24 or 70 mesh stainless screens
- Vented cap (0.1285 Hole)

FCS-1303-70
FCS-1303-24

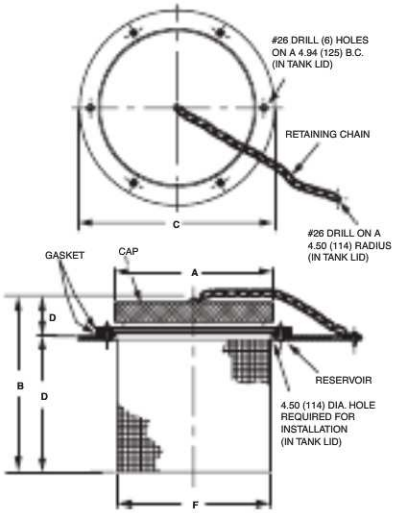

Dimensional Detail

Model No.	MESH		A	B	C	D	E	F
FCS-1303-70	70	IN	4.4	5.2	5.6	4	1.31	4.4
		MM	112	133	142	102	33	112
FCS-1303-24	24	IN	4.4	5.2	5.6	4	1.31	4.4
		MM	112	133	142	102	33	112

Super Filler Weld & High Necks

Model FCS-1303-Necks

- 18 Gauge Plain Steel

FCS-1303-2.5HN
A = 2.56

FCS-1303-150
A = 1.50

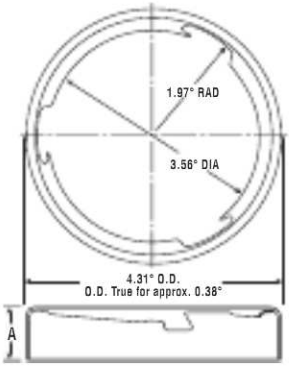

Phone: 937/277-9364 FAX: 937/277-6516 www.lenzinc.com

Breather Filter-Threaded Metal Assemblies

Breather Filter

Model BF

These units act as ventilators to provide a free flow of clean, fresh air into hydraulic fluid, fuel, oil, chemical and coolant tanks or reservoirs. They compensate for changes in fluid level, temperature and altitude . . . provide positive protection for airborne contamination for tanks, pumps, valves, cylinders and other components. Large oil resistant filter elements filter dirt and dust particles as small as 10 Microns (40 micron standard).
Cover removes for easy cleaning.
Zinc plated.

10 MICRON OPTION: EXAMPLE BF-6-10M

Dimensional Detail

MODEL	MICRON	PIPE SIZE	AIR FLOW		A	B	C	D
BF-4	10, 40	1/4"	4	IN MM	1.4" 35"	1.9" 47	1" 25	0.7" 18
BF-6	10, 40	3/8", 9/16"-18	4	IN MM	1.4" 35	1.9" 47	1" 25	0.7" 18
BF-8	10, 40	1/2"	35	IN MM	2.6" 67	2.9" 74	1.4" 36	0.9" 24
BF-12	10, 40	3/4"	40	IN MM	2.6" 67	3" 76	1.4" 36	1.1" 27
BF-16	10, 40	1"	40	IN MM	3" 76	3.3" 83	1.7" 43	1.4" 36

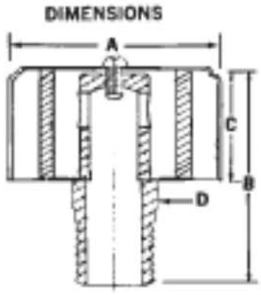

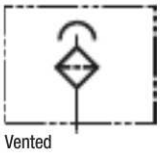
Vented

Ordering Code

* — BF — 6 — *

OMIT	
BPC	BF4, 6, 12, 16
ISO	BF-16

SERIES
BF 1/2", 3/4, 1"
BFA - SAE #6

SIZE
4
6
8
12
16

OPTIONS	
DIP	3/4", 1"
10M	1/4", 3/8", 1/2", 3/4", 1"

Pressurized Breather Filter

BF-1216-P5

This device is similar to a conventional breather, but it incorporate s a relief valve set at 5 PSI and a vacuum breaker. When the fluid level first falls, air enters the reservoir through the vacuum breaker and filter. When the level rises, air is compressed rather than being expelled. Thereafter, changing fluid levels are accommodated by the changing size of the air bubble in the reservoir, instead of by breathing to atmosphere.
Pressurized breathers can reduce breathing by as much as 90% to 95%, increasing the life of the breather filter by a factor of 10. They are recommended for systems that are expected to operate in extremely dusty environments and mobile applications.

Pressurized Relief Valve
Double Valve

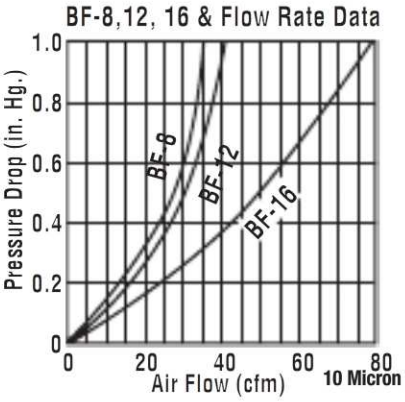

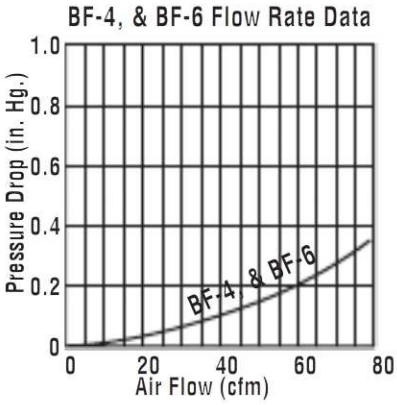

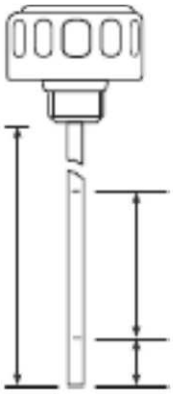

Please supply drawing specifying lengths shown.
Dipstick may be marked "FULL" and "ADD".
Optional wording available.

Breather Filter-Threaded

LMB/BF Series

- Steel trivalent zinc plated
- Air flow to 30 CFM
- Oil transfer rate to 190 GPM
- Operating temperature (-22F TO 212 F)
- Compatible with petroleum based fluids

Options:

- 10 or 40 Micron
- 1/4" thru 1" NPT port size
- Dipstick available on some models
- Anti splash available on some models

LMB-04
LMB-06

BF-0816
BF-1216
BF-1616

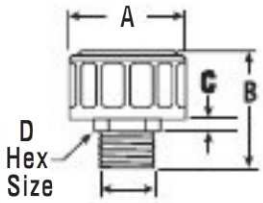

(NPT Male)

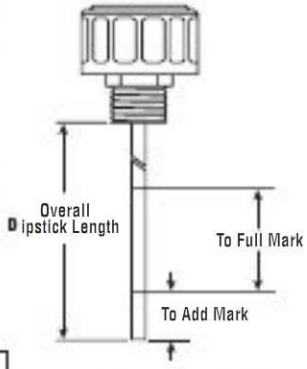

Dimensional Detail

MODEL	PORT	MICRON	AIR FLOW CFM	OIL TRANSFER RATE GPM		A	B	C	HEX D (dia)
LMB-04	1/4"	40	10	72	IN	1.85"	2.17"	0.28"	0.75"
		10	5	36	MM	47	55	7	19
LMB-06	3/8"	40	10	72	IN	1.85"	2.17"	0.28"	0.75"
		10	5	36	MM	47	55	7	19
BF-0816	1/2"	40	25	105	IN	3.15"	2.60"	0.31"	1.26"
		10	12	190	MM	80	66	8	32
BF-1216	3/4"	40	26.4	190	IN	3.15"	2.60"	0.31"	1.30"
		10	15	110	MM	80	66	8	33
BF-1616	1"	40	30	190	IN	3.15"	2.72"	0.31"	1.50"
		10	15	110	MM	80	69	8	38

Ordering Code

BPC — BF — 12 — 10M

OMIT	NONE
BPC	1216, 1616
ISO	BF-16, 1216, 0816
AS	LMB, BF

SERIES
LMB
BF
LMB

PORT SIZE	
04	1/4" (LMB)
06	3/8" (LMB)
0816	1/2" (BF)
1216	3/4" (BF)
1616	1" (BF)

OPTIONS	
10M	10 MICRONS
DIP	3/4", 1" Specify length in Inches
P5	5 PSI
P3	3 PSI

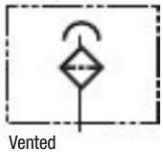

Vented

LMBA SAE thread version available in -6, -12

Large Capacity Threaded Breathers

BF Series

- Air flows to 165 CFM
- Oil transfer rates to 1057 GPM
- Maximum temperature 225 F
- Compatible with petroleum and mineral
- Based fluids
- Plastic Housing
- 10 Micron filtration, elements are replaceable

BF

LBE

Dimensional Detail

MODEL	REPLACEMENT	DISPLACEMENT	C	A	B	E	A/F	WEIGHT LBS/KGS
BF-20-10M	LBE-24-10M	265 GPM	1 1/4" NPT	4.3	5.4	0.5	2.2	0.88
		1000 LPM		110	138	12	55	0.4
BF-24-10M	LBE-24-10M	265 GPM	1 1/2" NPT	4.3	5.4	0.5	2.2	0.88
		1000 LPM		110	138	12	55	0.4
BF-32-10M	LBE-32-10M	530 GPM	2" NPT	5.7	5.7	0.6	2.6	1.21
		2000 LPM		145	145	15	65	0.55
BF-40-10M	LBE-40-10M	1057 GPM	2 1/2" NPT	7.3	7.7	0.6	3.1	2.86
		4000 LPM		185	195	15	80	1.3

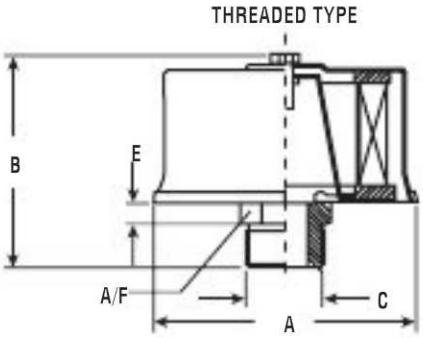

Phone: 937/277-9364 FAX: 937/277-6516 www.lenzinc.com

NY

Nylon Filler Breathers

Specifications

- 1/4" to 1 1/4" NPT Threaded Filter Filler Breathers
- Thermoplastic Polymide 66 Material
- Maximum Operating Temperature 212°F (100°C)
- Compatible with Petroleum Based Fluids, Gasoline, Fuel, and variety of Solvents
- Not compatible with Alcohol
- 10 or 40 micron polyurethane elements
- Buna Seals
- Anti splash option available
- NPT Threads
- Maximum Pressure 44 PSI (3 Bar)
- Optional steel dipstick available up to 7.9 inches (200 mm) and can be marked upon request.

Dimensional Detail

MODEL	PORT SIZE		A	B	C	D
NY-4	1/4"	IN	1.2"	1.4"	0.8"	0.6"
		MM	30	35	21	14
NY-4-4	1/4"	IN	1.6"	1.3"	0.8"	0.5"
		MM	41	33	21	12
NY-6	3/8"	IN	1.2"	1.4"	0.8"	0.6"
		MM	30	36	21	15
NY-4-6	3/8"	IN	1.6"	1.3"	0.8"	0.5"
		MM	41	34	21	13
NY-8	1/2"	IN	1.6"	1.4"	0.8"	0.6"
		MM	41	36	21	15
NY-12	3/4"	IN	1.8"	1.5"	0.9"	0.6"
		MM	46	38	22	16
NY-7-12	3/4"	IN	2.8"	2"	1.4"	0.7"
		MM	70	52	35	17
NY-16	1"	IN	1.8"	1.5"	0.9"	0.6"
		MM	46	38	22	16
NY-7-16	1"	IN	2.8"	2.1"	1.4"	0.7"
		MM	70	54	35	19
NY-7-20	1 1/4"	IN	2.8"	2.2"	1.4"	0.8"
		MM	70	55	35	20
NY-7-A20	SAE 1 5/8"-12	IN	2.8"	2.2"	1.4"	0.8"
		MM	70	55	35	20

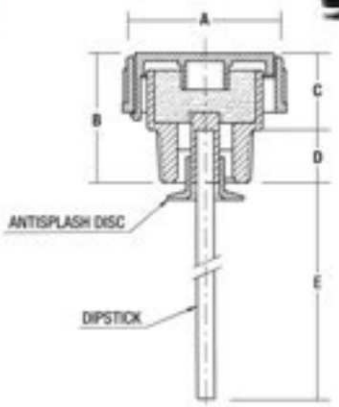

E = Customer Selection

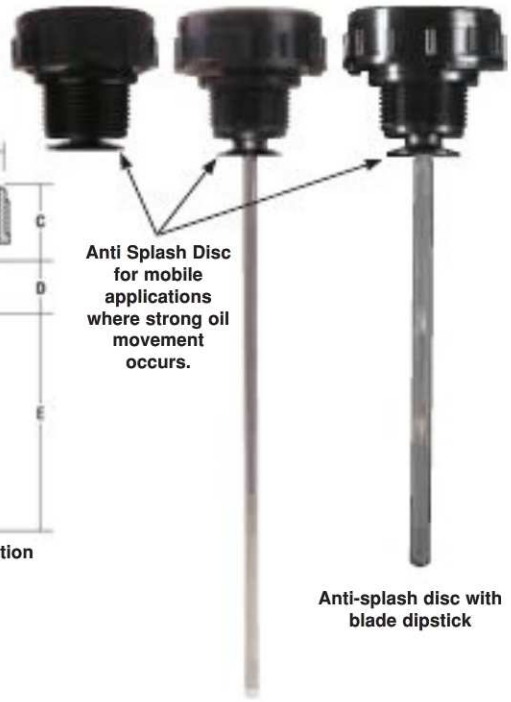

Anti Splash Disc for mobile applications where strong oil movement occurs.

Anti-splash disc with blade dipstick

Anti-splash disc with round dipstick

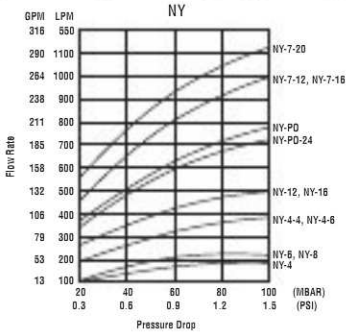

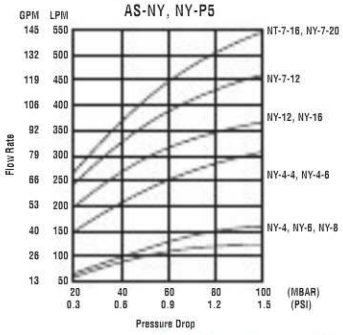

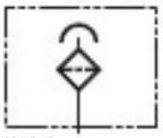

Vented

Pressurized Relief Valve Double Valve

Ordering Code

AS — NY — 7 — 12 — DIP**

OPTIONS	
OMIT	NONE
*AS	ANTI-SPLASH

*Anti-splash not available NY-4

SERIES
NY NPT

DIAMETER- PORT SIZE		
OMIT	1.2 INCHES	1/4", 3/8", 1/2"
4	1.6 INCHES	1/4", 3/8", 1/2"
OMIT	1.8 INCHES	3/4, 1"
7	2.8 INCHES	3/4", 1", 1 1/4"

THREAD	
4	1/4"
6	3/8"
8	1/2"
12	3/4"
16	1"
20	1 1/4"
A20	1 5/8"-12

OPTIONS	
10M	10 MICRON
DIP**	DIPSTICK SPECIFY INCHES UP TO 24 INCHES
P5	DOUBLE VALVE
SB	SINTERED BRONZE

P5 not available NY-4, NY-6, NY-16

NY-PF

Nylon Push Fit Breathers

Specifications

- .7 in to 1.2 in. (18 to 30 mm) Push Fit Filter Filler Breathers
- Push fit breather with easy grip vertical ribs fit snugly into pre-drilled hole and seals by "O"-Ring hole tolerance .003 in. (0.1mm)
- Thermoplastic Polymide 66 Material
- Maximum Operating Temperature 212°F (100°C)
- Compatible with Petroleum Based Fluids, Gasoline, Fuel, and variety of Solvents
- Not compatible with Alcohol
- 10 or 40 micron polyurethane elements
- Buna Seals
- Anti splash option available
- Maximum Pressure 44 PSI (3 Bar)
- Optional steel plated dipstick available up to 7.9 inches (200 mm) and can be marked with min & max notches upon request

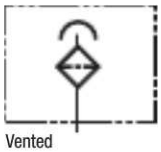

Vented

Dimensional Detail

MODEL NO.		F	D	d	h1	d1	h2
NYPF-18	IN	0.71"	1.42"	0.91"	0.67"	0.2"	0.79"
	MM	18	36	23	17	5	20
NYPF-20	IN	0.79"	1.42"	0.94"	0.67"	0.16"	0.75"
	MM	20	36	24	17	4	19
NYPF-26	IN	1.02"	1.61"	1.1"	0.67"	0.16"	0.83"
	MM	26	41	28	17	4	21
NYPF-30	IN	1.18"	1.85"	1.3"	0.67"	0.16"	0.83"
	MM	30	47	33	17	4	21
NYPFV-18	IN	0.71"	1.42"	0.91"	0.67"	0.2"	0.79"
	MM	18	36	23	17	5	20
NYPFV-20	IN	0.79"	1.42"	0.94"	0.67"	0.16"	0.75"
	MM	20	36	24	17	4	19
NYPFV-26	IN	1.02"	1.61"	1.1"	0.67"	0.16"	0.83"
	MM	26	41	28	17	4	21

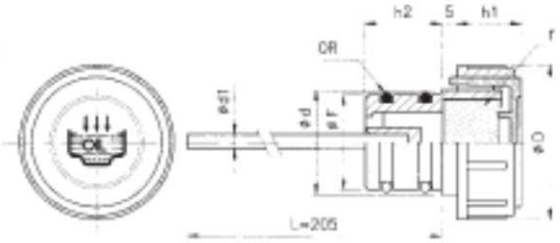

ADD AS - As prefix for Anti-splash
ADD DIP Suffix for Dipstick

NYPFV has 3.6 PSI one way check valve

LDP

Eye Handle Dipsticks

- Eye handle steel plated dipsticks
- Handle material Thermoplastic Polymide 66
- Starting chamfer is 45° degrees with hole tolerance .003 in. (.01 mm)
- Maximum Operating Temperature 212° F (100° C)
- Compatible with Petroleum Based Fluids, Gasoline, Fuel, and variety of Solvents
- Not compatible with Alcohol
- Optional breather hole available
- Buna Seals (one or two seals)
- Maximum length is 7.9 in. (200 mm)
- Maximum Pressure 44 PSI (3 Bar)
- Steel plated dipstick available up to 7.9 inches (200 mm) and can be marked with min & max notches upon request

Dimensional Detail

MODEL NO		F	D	d	H2	H1
LDP-1-14	IN	0.55"	1.06"	0.51"	0.51"	1.34"
	MM	14	27	13	13	34
LDP-1-18	IN	0.71"	1.26"	0.55"	0.67"	1.77"
	MM	18	32	14	17	45
LDP-1-20	IN	0.79"	1.26"	0.55"	0.71"	1.75"
	MM	20	32	14	18	44.5
LDP-2-12	IN	0.47"	1.18"	0.55"	0.79"	1.42"
	MM	12	30	14	20	36
LDP-2-14	IN	0.55"	1.06"	0.51"	0.79"	1.34"
	MM	14	27	13	20	34
LDP-2-18	IN	0.71"	1.3"	0.55"	0.83"	1.73"
	MM	18	33	14	21	44
LDP-2-20	IN	0.79"	1.38"	0.63"	0.83"	1.81"
	MM	20	35	16	21	46

Add V Suffix for Breather Hole; Except Not Available On LDP-2-12 (Not available)

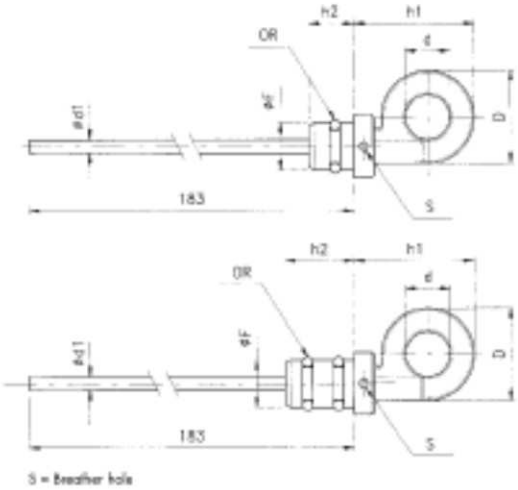

Phone: 937/277-9364 FAX: 937/277-6516 www.lenzinc.com

NY-LVB

Nylon Vent Breathers

Specifications

- 1/4", 3/8", 1/2" NPT Vent Filler Breathers
- Valve opens when pressure exceeds 4 PSI (.25 Bar) avoids loss of oil and valve allows excess pressure to escape
- Thermoplastic Polymide 66 material marked with check valve symbol
- Maximum operating temperature 212° F (100° C)
- Compatible with petroleum based fluids, gasoline, Fuel, and variety of solvents
- Not compatible with alcohol
- Buna Seals, Stainless Steel Springs
- Anti splash option available
- Maximum Pressure 44 PSI (3 Bar)
- Optional steel dipstick available up to 7.9 inches (200 mm) and can be marked upon request

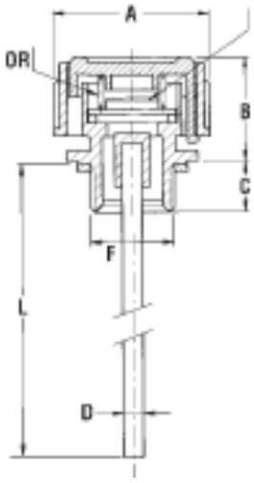

Dimensional Detail

MODEL NO.		F	OR	L	A	B	C	D
NY-LVB-4	IN MM	1/4"	4 PSI 0.3 Bar	7.7" 195	1.2" 30	0.8" 21	0.5" 12	0.2" 4
NY-LVB-6	IN MM	3/8"	4 PSI 0.3 Bar	7.7" 195	1.2" 30	0.8" 21	0.5" 12	0.2" 4
NY-LVB-8	IN MM	1/2"	4 PSI 0.3 Bar	7.7" 195	1.2" 30	0.8" 21	0.6" 14	0.2" 4
NY-LVB-12	IN MM	3/4"	4 PSI 0.3 Bar	7.7" 195	1.8" 47	0.9" 22	0.55" 14	0.2" 5

ADD AS - As prefix for Anti-splash
ADD DIP Suffix for Dipstick

NYPO-24

Push on Breathers

Specifications

- Thermoplastic Polymide 66 material
- Maximum operating temperature 212° (100 C)
- Compatible with petroleum based fluids, gasoline, grease
- Spring steel plated clip
- 10 or 40 micron polyurethane elements
- Maximum tube outside diameter 1.5" or 39 MM
- Optional steel dipstick available

Dimensional Detail

EL NO.		d	h	D	L	d1	h1	h2	LBS/GR
NYPO-24	IN MM	1.5" 39	1.1" 28	2.8" 70	1.9" 48	1.8" 45	0.1" 3	0.3" 7	0.2" 67
NYPO-24-10M	IN MM	1.5" 39	1.1" 28	2.8" 70	1.9" 48	1.8" 45	0.1" 3	0.3" 7	0.2" 67

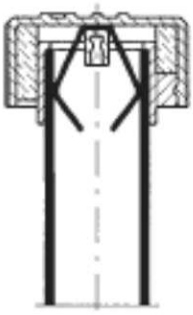

For 1 1/2" Tube Maximum OD

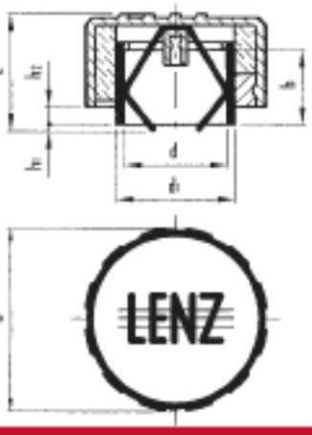

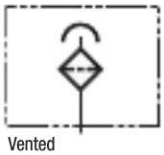

Vented

Optional Dipstick

NY-B

Nylon Bayonet Filler Breathers

Specifications

- Thermoplastic Polymide 66 Material
- Maximum Operating Temperature 212°F (100°C)
- Compatible with Petroleum Based Fluids, Gasoline, Fuel, Variety of solvents
- Buna Tab seals
- Cork impregnated tank gaskets
- 10 or 40 micron polyurethane elements
- SAE J829 Mounting Flange

Options

- Pressurized Double valve 5 PSI
- Blade dipsticks
- Stainless screws, tank flange-consult factory

MODEL NO.	MICRON	GPM	AIR FLOW		A	B	C	D	E	F
NY-B	10, 40	200	30	IN	2.75"	5.3"	3.2"	3"	2.3"	1.9"
				MM	70	135	81	76	58	48

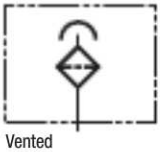
Vented

Pressurized Relief Valve
Double Valve

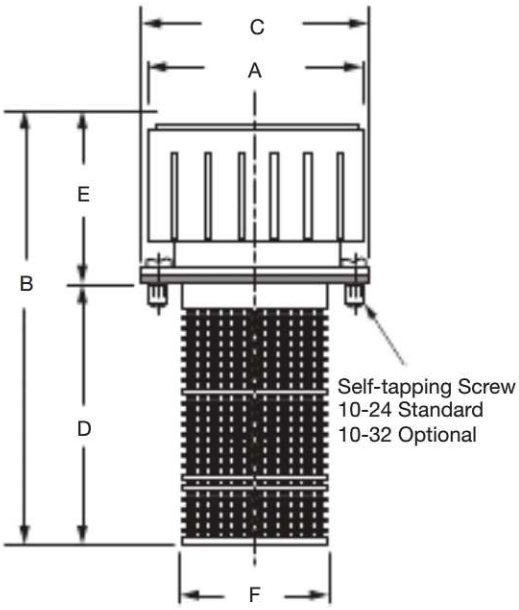

Ordering Code

* - NY-B - 40 - * - * - *

OPTIONS	
OMIT	
SM	SIDE MOUNT
AS	ANTISPLASH

SERIES
NY-B

FILTER	
10	10 MICRON
40	40MICRON

DOUBLE VALVE	
P3	3PSI
P5	5 PSI
	OMIT

SCREENS
OMIT (3"-30 STD.)
3-100
N
6–30
6–100
8–30

OPTIONS	
1.5 HN	1.5" HIGH NECK
3 HN	3" HIGH NECK
DIP	DIPSTICK
LCH	LESS CHAIN
BUNA	RUBBER GASKETS
10-32	SCREWS

Cap Only Ordering Code

* - NYC-B - 40 - * - *

OPTIONS	
OMIT	
AS	ANTISPLASH

SERIES
NYC-B

FILTER	
10	10 MICRON
40	40MICRON

DOUBLE VALVE	
OMIT	
P3	3PSI
P5	5PSI

OPTIONS	
LCH	LESS CHAIN
DIP	DIPSTICK
BUNA	RUBBER GASKET

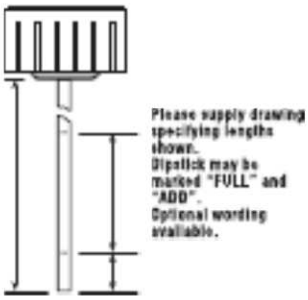

Phone: 937/277-9364 FAX: 937/277-6516 www.lenzinc.com

Desiccant Breathers

Model DB

- Construction: ABS plastic & impact-modified acrylic
- Removes corrosive water vapor
- Operating temp. range: -20˚ F to +200˚ F (-28˚ C to +93˚ C)
- Four standard sizes (3" to 10")
- Bi-directional air flow
- Silica gel turns from gold to green when maximum absorption is reached
- Dual filter system with anti-static guard
- Solid contaminant filtration surface area 20.6 in² (133 cm²)
- Silica gel absorbs up to 40% of its weight in water
- Resistant to alkalis, hydrocarbons, non-oxidizing acids, salt water, and synthetic oils

Option

- Activated charcoal media (consult factory)
- 5 PSI Maximum Operating Pressure

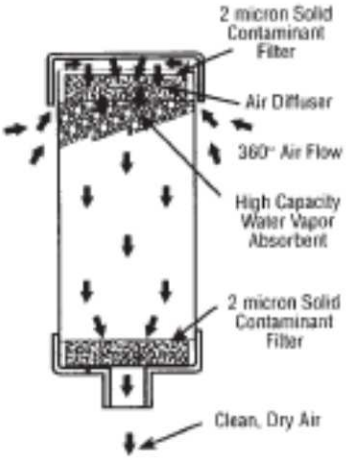

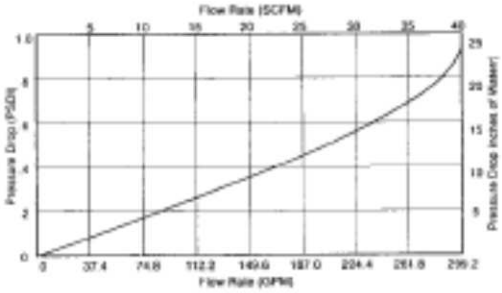

Dimensional Detail

MODEL NO.	BREATHER CONNECTOR	MICRON RATING	CAPACITIES CFM	CAPACITIES GPM	MAX. H2O CAPACITY FL. OZ	MAX. H2O CAPACITY CUP	A IN.	A CM.	B IN.	B CM.	C IN.	C CM.
DB-03	1 5/16" O.D. Tube	2	35	262	3.1	.4	3.5"	9.0	5"	12.8	1.25"	3.2
DB-05	1 5/16" O.D. Tube	2	35	262	6.2	.8	5.0"	12.8	5"	12.8	1.25"	3.2
DB-08	1 5/16" O.D. Tube	2	35	262	13.9	1.7	8.0"	20.5	5"	12.8	1.25"	3.2
DB-10	2" NPT	2	100	750	18.5	2.3	10.0"	25.4	5"	12.8	1.6"	4.1

Note: Connector for sizes 3, 5 and 8 1 5/16" O.D. tube is designed to interface fit with an adapter on new installations – adapters need not be replaced.
Hex diameter on DB-10 is 2.56"

MODEL NO.	DESCRIPTION
DB-BA	Bayonet Adapter
DB-C1	1"-12 UNF Female to Female Coupling
DB-C2	1½"-16 UNF Female to Female Coupling
DB-FA	Flange Adapter
DB-R1	1" NPT Pipe Thread Reducer
DB-R2	¾" NPT Pipe Thread Reducer
DB-R3	½" NPT Pipe Thread Reducer

DB-FA Flange Adapter

DB-R1, R2, R3 Threaded Adapter

DB-BA Bayonet Adapter

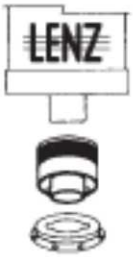

DB-C1, C2 Spin-on Adapter

Rubber Bushings

LRB Series

- 70 Durometer Nitrile Rubber
- 1/8" to 2" pipe and tube diameters
- Compatible with mineral & petroleum based fluids
- Available in packages of 10
- -65°F to + 250°F operating temperature

A comprehensive range of rubber bushings designed to reduce vibration noise and seal pipes and tubes in the reservoir top plate. Do not use below the oil level.

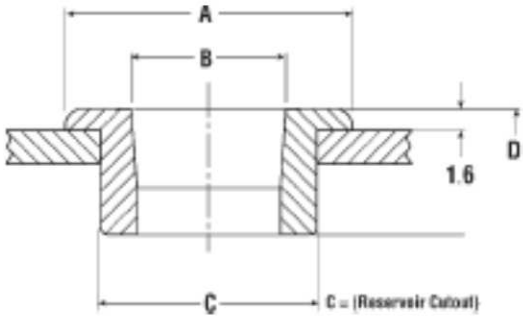

Dimensional Detail

MODEL	B PIPE	B TUBE	B MM	A INS	MM	C INS	MM	D INS	MM	WEIGHT LBS	KG
LRB-2801		1/4"	6	1.2	30	0.7	18.3	0.7	18	0.02	0.007
LRB-2802			8	1.2	30	0.7	18.3	0.7	18	0.02	0.007
LRB-2803		3/8"		1.2	30	0.7	18.3	0.7	18	0.02	0.007
LRB-2804	1/8"		10	1.2	30	0.7	18.3	0.7	18	0.01	0.006
LRB-2805		1/2"	12	1.2	30	0.7	18.3	0.7	18	0.01	0.006
LRB-2806	1/4"		14	1.6	40	1.1	28.5	0.9	24	0.4	0.18
LRB-2807			15	1.6	40	1.1	28.5	0.9	24	0.37	0.17
LRB-2808		5/8"	16	1.6	40	1.1	28.5	0.9	24	0.35	0.16
LRB-2809	3/8"			1.6	40	1.1	28.5	0.9	24	0.35	0.16
LRB-2810			18	1.6	40	1.1	28.5	0.9	24	0.35	0.16
LRB-2811		3/4"		1.6	40	1.1	28.5	0.9	24	0.33	0.15
LRB-2812			20	1.6	40	1.1	28.5	0.9	24	0.29	0.13
LRB-2813	1/2"			1.6	40	1.1	28.5	0.9	24	0.26	0.12
LRB-2814		7/8"	22	1.6	40	1.1	28.5	0.9	24	0.26	0.12
LRB-2815			25	2.2	55	1.7	42.5	0.9	24	0.71	0.32
LRB-2816	3/4"			2.2	55	1.7	42.5	0.9	24	0.66	0.3
LRB-2817			28	2.2	55	1.7	42.5	0.9	24	0.64	0.29
LRB-2818			30	2.2	55	1.7	42.5	0.9	24	0.57	0.26
LRB-2819		1 1/4"		2.2	55	1.7	42.5	0.9	24	0.53	0.24
LRB-2820	1"			2.2	55	1.7	42.5	0.9	24	0.46	0.21
LRB-2821			35	2.2	55	1.7	42.5	0.9	24	0.4	0.18
LRB-2822		1 1/2"	38	2.8	70	2.3	58.5	0.9	24	1.32	0.6
LRB-2823			42	2.8	70	2.3	58.5	0.9	24	0.97	0.44
LRB-2824	1 1/4"			2.8	70	2.3	58.5	0.9	24	0.95	0.43
LRB-2825	1 1/2"			2.8	70	2.3	58.5	0.9	24	0.71	0.32
LRB-2826		2"	50	2.8	70	2.3	58.5	0.9	24	0.6	0.27
LRB-2827	2"			3.1	80	2.7	63.5	0.9	24	0.68	0.31

See website technical bulletin TB.TA08.708 for further information.

Phone: 937/277-9364 FAX: 937/277-6516 www.lenzinc.com

Tank Clean-out Covers

Model TC

MODEL		A	B	C	D	GASKET	"L" BOLT	ACCESS HOLE
TC-6	IN MM	6" 152	5" 127	0.4" 10	14 GA.	TCG-6		5"
TC-10	IN MM	10" 254	8" 203	1.75" 44	7 GA.	TCG-10	1 1/4"	8"
TC-12	IN MM	12" 305	10" 254	1.75" 44	7 GA.	TCG-12	1 3/4"	10"
TC-14	IN MM	14" 356	12" 305	1.75" 44	7 GA.	TCG-14	1 3/4"	12"
TC-16	IN MM	16" 406	14" 356	1.75" 44	7 GA.	TCG-16	2"	14"
TC-18	IN MM	18" 457	16" 406	2" 51	7 GA.	TCG-18	2 1/2"	16"

** TC-6 is black powder coated*

Lip Gasket

TC-6

TC-12
With Lip Seal

TC-12D
With Lip Seal

Lenz has introduced a new series of tank covers, "TC Series". The tank covers include six models, ranging from a 6" to an 18" diameter. The TC Series tank covers are designed for ease of servicing hydraulic reservoirs through sidewall or through tank top.

Features Include:

- Buna lip seal supplied 10, 12, 14, 16, 18
- Nylon crush washer supplied
- Zinc plated steel 10, 12, 14, 16, 18
- Durable no-leak gasket
- Quick easy access for cleaning and inspection
- For standard and fireproof hydraulic fluids

Options:

- 6", 10", 12", 14", 16", 18" Diameters
- Drain available – Add "D" to Model Number
- Stainless Steel – Add "SS" to Model Number (304SS)
- TC-BA – Tank cover Baffle Adapter
- TC Bolt – 5/8"-11 Bolt (TC-BX "L") Specify length.
- EPDM Gasket for Fireproof Hydraulic Fluids (TC-G-**-EPDM)

Installation Drawing of TC-6

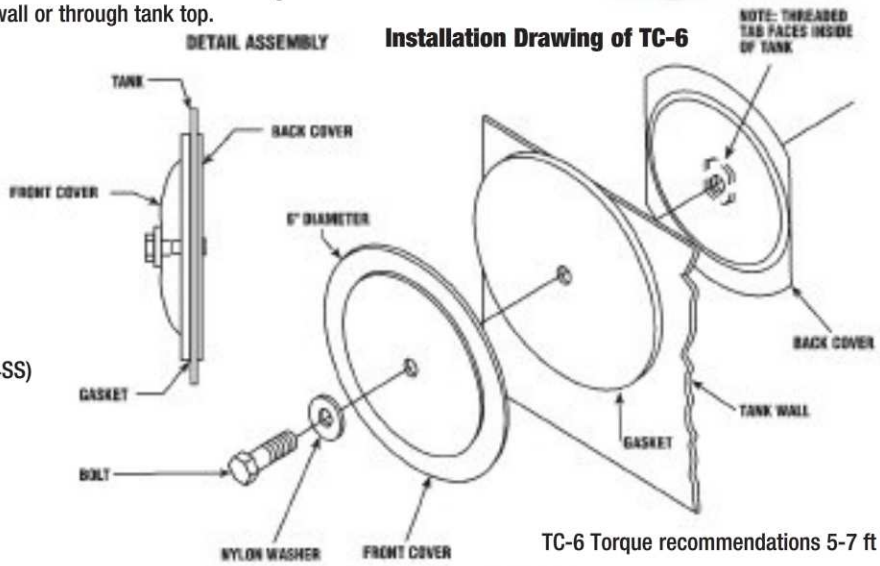

TC-6 Torque recommendations 5-7 ft lb.

Installation Drawing of TC Series 10, 12, 14, 16 & 18
(For use with Baffle)

See Lenz website for TCBR Bracket to Mound TC Covers in Tanks without Baffles

Maximum opening in tank should be 2" less than cover O.D.

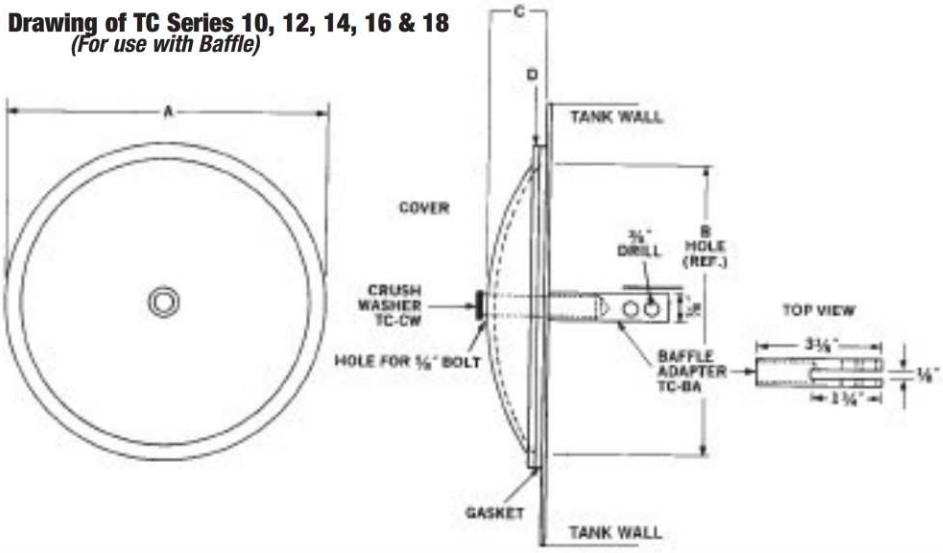

TC-BA Baffle Adapter is not included as part of the model numbers below. Order separately.

TC-10-18 Torque recommendations 15 ft lb.

Magnetic Drain Plug

AMDP, MDP Magnetic Drain Plug

Lenz Magnet Plugs are similar to standard pipe or straight thread drain plugs with one important difference, a permanent magnet is fastened to the plug body. This magnet attracts and holds abrasive, ferrous metal particles preventing their circulation through the lubrication or hydraulic system.

These abrasive, ferrous metal particles appear in lubricating or hydraulic systems as a result of the following conditions:

- The constant flaking effect of normal wear of moving parts
- Particles not removed by flushing operations after boring or machining.
- Chipping due to sub-surface casting flaws.
- Minute component breakdown caused by stress usage.

Usually a combination of factors accounts for the presence of these particles that cause excessive wear to vital components unless they are removed. By holding these particles, Lenz Magnetic Drain Plugs prevent excessive wear to the system's components.

AMDP

MDP

Dimensional Detail

Model Number	Port Size	Magnet Style	Overall A Length in. mm	B Body Length in. mm	Magnet Projection in. mm	C Head Size in. mm	Head Depth in. mm	Body Material	Style
MDP-4	1/4"	Bar Alnico V	.96 (24)	.45 (11)	.23 (6)	.37 9	.28 7	Steel	Square Head
MDP-6	3/8"	Disc Ferrite	.80 (20)	.47 (11)	.21 (5)	.43 11	.34 9	Steel	
MDP-8	1/2"	Disc Ferrite	.96 (24)	.57 (14)	—	.56 14	.38 10	Steel	
MDP-12	3/4"	Disc Ferrite	1.11 (28)	.62 (15)	—	.62 16	.45 11	Steel	
MDP-16	1"	Disc Ferrite	1.52 (38)	.75 (19)	—	.81 21	.52 13	Mall. Iron	
AMDP-6	9/16"-18	Disc Ferrite	.48 (12)	.38 (10)	—	.63 16	.28 7	Steel	Hollow Hex
AMDP-8	3/4"-16	Disc Ferrite	.56 (14)	.44 (11)	—	.83 21	.32 8	Steel	
AMDP-10	7/8"-14	Disc Ferrite	.63 (16)	.47 (12)	—	.96 24	.40 10	Steel	

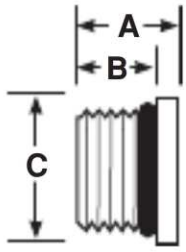

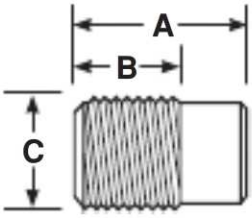

Reservoir Flanges

Suction and Return Line
Models SF & RF

Lenz Reservoir Flanges

Afford a leakproof seal for pipes or tubes passing through the reservoir top . . . keep fluid in, dirt out. No welding, no unions, and saves on piping assembly time. Both types come completely packaged with the parts as shown and with templates . . .ready for quick, easy installation. Meet ASA standards. They serve as economical inspection ports.

Suction Flanges

No. SF & SFO are designed for the suction pipe line of the reservoir. The parts are installed on the top of the tank as shown in the diagram, Figure 1. The larger models, SFO-24 to SFO-48, permit the use of filters larger than 4 1/2" in diameter*. All sizes allow the easy removal of suction strainers from ASA standard reservoirs.

Return Line Flanges

No. RF
Return Flanges are designed to accommodate the return pipe to the tank. The parts, as shown, are quickly and easily installed on the tank as shown in the diagram Figure 2. Range of model sizes and internal washer sizes are shown in table below in RF Models.

Dimensional Detail

PIPE SIZE	SUCTION FLANGE	RETURN FLANGE	SF, SFO	A	B	C	D	E	F	G
1/2"	SF-8	RF-8	IN	5.3"	5.5"	4.3"	2.1"	1.4"	0.8"	3"
			MM	135	140	109	53	36	20	76
3/4"	SF-12	RF-12	IN	5.3"	5.5"	4.3"	2.1"	1.4"	1"	3"
			MM	135	140	109	53	36	25	76
1"	SF-16	RF-16	IN	5.3"	5.5"	4.3"	2.1"	1.4"	1.3"	3"
			MM	135	140	109	53	36	33	76
1 1/4"	SF-20	RF-20	IN	5.3"	5.5"	4.3"	2.1"	2"	1.7"	3"
			MM	135	140	109	53	51	43	76
1 1/2"	SF-24		IN	5.3"	5.5"	4.3"	2.1"	2"	1.9"	3"
			MM	135	140	109	53	51	43	76
1 1/2"	SFO-24	RF-24	INN	7.5"	7.5"	6.3"	3.1"	2"	1.9"	3"
			MM	191	191	160	79	51	48	76
2"	SFO-32	RF-32	IN	7.5"	7.5"	6.3"	3.1"	2.5"	2.3"	3"
			MM	191	191	160	79	64	58	76
2 1/2"	SFO-40		IN	7.5"	7.5"	6.3"	3.1"	3"	2.8"	4.25"
			MM	191	191	160	79	76	71	108
3"	SFO-48		IN	7.5"	7.5"	6.3"	3.1"	3.8"	3.5"	4.25"
			MM	191	191	160	79	97	89	108
NONE		RF BLANK								

**SF Models permit use of sump strainers up to 4 1/2" in diameter.*
SFO Models permit use of sump strainers up to 6 1/2" in diameter.

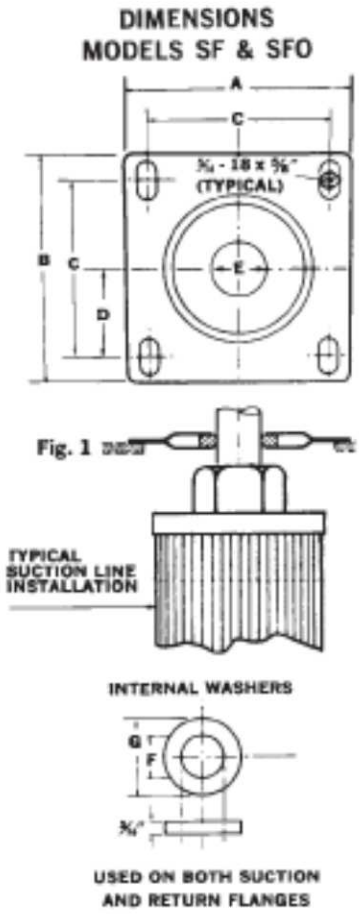

Return Flange Model RF

Supplied with Self-Tapping Screws and Washers

Dimensions Model RF

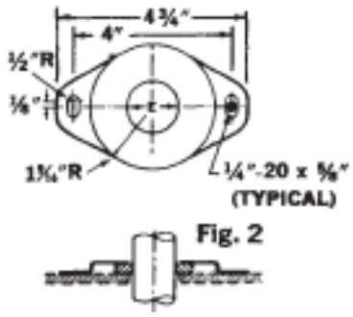

See website technical bulletin TB.TA08.708 for further information.

Sight Level Gauge

LLG & T-LLG

- 3", 5", 10" (75, 127, 254 mm) mounting center transparent Oil Level Indicator with guard
- Transparent Polymide Resin material ultrasonically welded (3", 5")
- Transparent Polycarbonate Tube (10")
- Slotted guard is steel with black finish
- Maximum Operating Temperature 212°F (100°C)
- Compatible with petroleum based fluids, gasoline, diesel, and variety of solvents
- Only compatible with alcohol IF-AR
- 1/2-13 UNC or (10 mm, 12 mm) bolt threads available
- Maximum pressure 44 PSI (3 Bar)
- Nitrile seal
- T-LLG includes standard red thermometer or optional blue thermometer is available

LLG-3

T-LLG-5

T-LLG-5-NG
No Guard

LLG-10

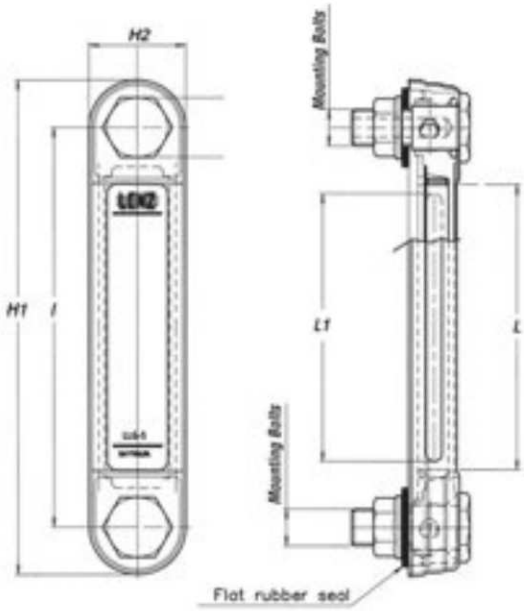

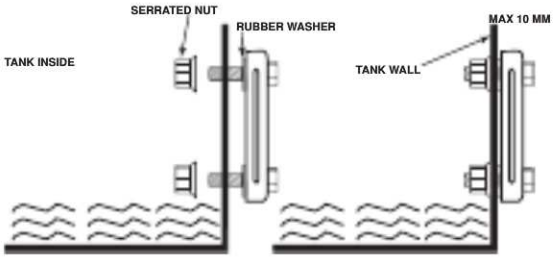

ASSEMBLING INSTRUCTIONS

Method A: Tank has to have two drilled and tapped holes in either M10, M12 or 1/2-13 UNC and can be fastened from outside into the threaded holes

Method B: Two holes must be drilled (10.2 mm on M10, 12.2 mm on M12, 12.6 mm on 1/2-13 UNC) and the level gauge fastened with two hex nuts from the inside of the tank Tolerance on center-to-center distance: 0.3 mm, tolerance on the drilled holes 0.2 mm

Max tightening torque suggested 4 Ft-Lbs / 5 Nm

Dimensional Detail

MODEL		l	H1	H2	L	MOUNTING L1	HOLE	MOUNTING BOLT	WALL CENTER	BOLT THICKNESS	TORQUE
LLG-3, T-LLG-3	IN	3"	4.2"	1.2"	1.5"	1.3"	.50–.53	1/2-13X1.75"	2.98–3.01	0.4	4 FT-LBS
	MM	76	107	30	39	34	10.2–10.5	M10-1.5X1.65"	75.7–76.3	10	5 NM
LLG-5, T-LLG-5	IN	5"	6.1"	1.2"	3.1"	3.3"	.50–.53	1/2-13X1.75"	4.98–5.01	0.4	4 FT-LBS
	MM	127	155	30	80	86	12.6–12.9	M12-1.75X1.65"	126.7–127.3	10	5 NM
LLG-10, T-LLG-10	IN	10"	11.1"	1.3"	7"	N/A	.50–.53	1/2-13X1.75"	9.98–10.01	0.4	4 FT-LBS
	MM	254	282	33	178	N/A	12.6–12.9	M12-1.75X1.65"	253.7-254.3	10	5 NM

Ordering Code

T — LLG — 5 — *

THERMOMETER	
OMIT	LEVEL
T	RED THERM
BT	BLUE THERM

SERIES
LLG

SIZE
3
5
10

OPTIONS	
OMIT	NO OPTIONS
*M10	M10 BOLT
M12	M12 BOLT
V	VITON SEALS
*PE	ETHYLENE-PROPYLENE
*LB	1/2-13 x 2" BOLT
*RB	REFLECTING BALL 3.5
*AR	ALCOHOL RESISTANT
*M10SS	SS BOLT, NUT
M12SS	SS BOLT, NUT
*NG	NO GUARD

*Not available on 10"

GYR-LLG-5

See website technical bulletin TB.TA06.708 and TB.TA12.708 for further information.

LLG-5-RB-NG

Phone: 937/277-9364 FAX: 937/277-6516 www.lenzinc.com

Fluid Level Sight Gauges

Sealed Back

Model 550/T-550

3 Sizes (3.25", 5" & 7" bolt centers)

Models 550 - 3", 5" & 7" body frames are of heavy aluminum alloy with flat black finish. Jam nuts and flat washers are steel; hollow mounting bolts are carbon steel, zinc plated and furnished for 1/4" thick reservoir walls. Special longer hollow bolts can be furnished on request for 7/8" & 1 1/2" thick walls. (12mm & 3/8"-24 bolts available) Stainless steel bolts available upon request.

Standard 550 and T-550 models have 70 durometer buna - N, O-Ring Seals, silicone gaskets, tempered glass window and brushed aluminum backgrounds. They are for use with petroleum products, oil-water emulsions, and glycol-water solutions where temperatures do not exceed 200°F. Where the fluids used in the sight gauge is not known, we can furnish Viton O-rings (at additional cost).

T-550PE-5 Example:
(ethylene-propylene for phosphate ester base fluids)

Model T-550 With Thermometer (Available in 3 1/4", 5" & 7")

Note Dual Scales Fahrenheit/Centigrade

T-550-7 **550-5** **T-550-3**

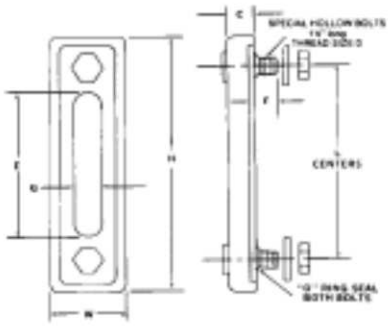

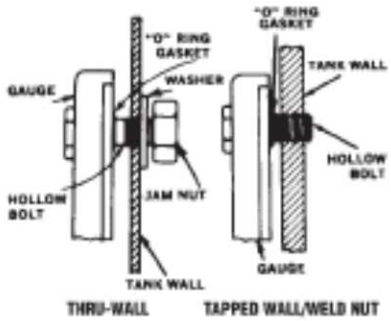

Note* When ordering for tapped tank wall, add "SB" to part number Ex: SB-T-550-5

Dimensional Detail

STANDARD MODELS	THERMOMETER MODELS		L	H	W	C	D	E	F	G
550-3	T-550-3	IN	3.25"	4.8"	2"	0.7"	1/2-13 UNC-2	2.2"	0.8"	0.8"
		MM	82.55	122	51	18		56	20	20
550-5	T-550-5	IN	5"	6.6"	2"	0.7"	1/2-13 UNC-2	3.9"	0.8"	0.8"
		MM	127	168	51	18		99	20	20
550-7	T-550-7	IN	7"	8.6"	2.3"	0.8"	1/2-13 UNC-2	5.9"	0.7"	1"
		MM	178	218	58	20		150	18	25

Ordering Code

* — T — 550 — 5 — *

MOUNTING	
OMIT	THRU WALL
SB	TAPPED WALL/ WELD NUT

THERMOMETER	
OMIT	LEVEL
T	RED THERM

SERIES
550

SIZE
3
5
7

OPTIONS	
OMIT	1/2"-13 x 1.75" BOLTS
SS	STAINLESS BOLTS/NUTS (1/2"-13 x 1.75)
V	VITON SEALS
PE	ETHYLENE-PROPYLENE
ACR	ACRYLIC LENS
LEX	LEXAN LENS
M12	12mm BOLTS X 1.75
3/8"-24	3/8" BOLTS (3/8"-24 x 1.75)
LB	1/2"-13 x 2" BOLTS
SIL	SILCONE GASKET

Fluid Level Sight Windows

LSW, LSW-A SERIES

- C.R.S. Hex nut
- Electroless nickel plate, zinc plating options
- 3/8" Thru 2" NPT
- 9/16"-18 Thru 1 7/8"-12 SAE
- Soda lime glass, clear lens, fused to body
- Maximum operating temperature 500°F (NPT)
- Buna seals standard 250°F, viton 350° on SAE version
- Compatible with petroleum based fluids, gasoline, lube oil fuel, variety of solvents

LSW

LSW-R

NPT THREADS — Dimensional Detail

OPEN VIEW	WITH REFLECTOR	REFLECTOR BALL	NPT A		B	C	D	E	MAX PRESS PSI/BAR
LSW-6	LSW-6-R	LSW-6-RB	3/8	IN	0.51	0.44	0.75	0.72	1800
				MM	13	11	19	18	122
LSW-8	LSW-8-R	LSW-8-RB	1/2	IN	0.57	0.56	0.94	0.78	1750
				MM	14	14	24	20	119
LSW-12	LSW-12-R	LSW-12-RB	3/4	IN	0.63	0.75	1.06	0.94	1500
				MM	16	19	27	24	102
LSW-16	LSW-16-R	LSW-16-RB	1	IN	0.94	0.94	1.38	1.25	1250
				MM	24	24	35	32	85
LSW-20	LSW-20-R	LSW-20-RB	1 1/4	IN	0.81	1.18	1.75	1.21	1000
				MM	21	30	44	31	68
LSW-24	LSW-24-R	LSW-24-RB	1 1/2	IN	0.81	1.44	2	1.21	750
				MM	21	37	51	31	51
LSW-32	LSW-32-R	LSW-32-RB	2	IN	0.81	1.87	2.5	1.21	500
				MM	21	47	64	31	34

SAE THREADS — Dimensional Detail

OPEN VIEW	WITH REFLECTOR	REFLECTOR BALL	SAE A		B	C	D	E	MAX PRESSURE
LSW-A6			9/16-18	IN	0.39	0.44	0.69	0.73	1850
				MM	10	11	18	19	125
LSW-A8	LSW-A8-R	LSW-A8-RB	3/4-16	IN	0.44	0.56	0.87	0.8	1750
				MM	11	14	22	20	119
LSW-A12	LSW-A12-R	LSW-A12-RB	1 1/16-12	IN	0.59	0.75	1.25	0.96	1500
				MM	15	19	32	24	102
LSW-A16	LSW-A16-R	LSW-A16-RB	1 5/16-12	IN	0.59	1.13	1.5	1.02	1050
				MM	15	29	38	26	71
LSW-A20	LSW-A20-R	LSW-A20-RB	1 5/8-12	IN	0.59	1.19	1.75	1.06	600
				MM	15	30	44	27	41
LSW-A24	LSW-A24-R	LSW-A24-RB	1 7/8-12	IN	0.59	1.63	2.12	1.12	600
				MM	15	41	54	28	41

White ball in size -6, Red ball in all other models.

NPT

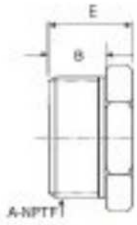

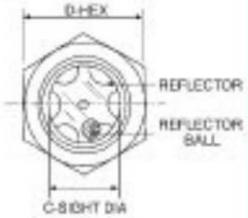

SAE

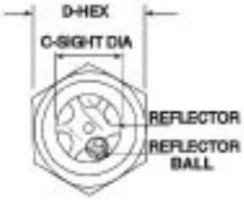

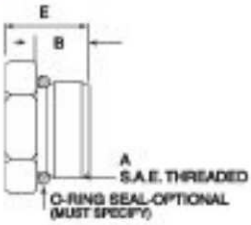

WFA Weld Flange

For SAE & N.P.T. Weld Port Flanges and Adapters see page 35-37a

LWBA Weld Flange

Phone: 937/277-9364 FAX: 937/277-6516 www.lenzinc.com

Oil Level Indicators

LSG, LSGR

- Transparent Polymide Material / Not compatible with Alcohol
- Maximum Operating Temperature 212°F (100°C) / Nitrile Seal
- Compatible with Petroleum Based Fluids, Gasoline, Fuel, and variety of Solvents
- NPT, BSP and SAE Threads available
- Maximum Pressure 44 PSI (3 Bar)
- Central Red indicator Point
- Contrast reflector available
- Locknut available for mounting on reservoirs less than .2 inches wall thickness

LSG-A-R
(SAE)

LSG-R
(NPT/BSP)

Dimensional Detail

Model	THREAD F		HEX CH	D	d	h1	h2	TORQUE FTLB-NM	WEIGHT LB-GM
LSG-4-R	1/4" BSP	IN	0.7"	0.8"	0.5"	0.3"	0.4"	3"	0.007"
		MM	17	20	12	8	9	4	3
LSG-6-R	3/8" BSP	IN	0.7"	0.9"	0.5"	0.3"	0.4"	3"	0.009"
		MM	18	22	12	8	10.5	4	4
LSG-8-R	1/2" BSP	IN	0.9"	1.1"	0.6"	0.3"	0.5"	6"	0.011"
		MM	24	28	16	8	12	8	5.0
LSG-A8-R	3/4"-16" SAE	IN	1.1"	0.6"	0.7"	0.3"	0.5"	6"	0.011"
		MM	28	16	18	8	12	8	5.0
LSG-12-R	3/4" NPT	IN	0.9"	1.1"	0.9"	0.2"	0.7"	7.5"	0.018"
		MM	24	28	23	6	19	10	8.2
LSG-A12-R	1 1/16"-12 SAE	IN	0.9"	1.4"	0.9"	0.4"	0.6"	7.5"	0.018"
		MM	24	36	23	9	16	10	8.2
LSG-16-R	1" NPT	IN	1.2"	1.4"	1.1"	0.4"	0.8"	9"	0.026"
		MM	30	36	27	10	21	12	11.8
LSG-A16-R	1 5/16"-12 SAE	IN	1.2"	1.7"	1.1"	0.4"	0.7"	9"	0.026"
		MM	30	43	29	10	18	12	11.8
LSG-20-R	1 1/4" NPT	IN	1.4"	1.7"	1.3"	0.4"	0.9"	11"	0.044"
		MM	36	42	32	10.65	22.85	15	20.0
LSG-24-R	1 1/2" BSP	IN	2.0"	2.3"	1.5"	0.4"	0.8"	11"	0.044"
		MM	50	58	39	10	21	15	20.0
LSG-A24-R	1 7/8" -12 SAE	IN	2.0"	2.3"	1.7"	0.4"	0.8"	11"	0.044"
		MM	51	58	43	10	21	15	20.0
LSG-32-R	2" BSP	IN	2.5"	2.9"	1.9"	0.5"	0.8"	11"	0.044"
		MM	64	74	48	12	20	15	20
LSG-M18	M18 X1.5	IN	0.8"	1.0"	0.6"	0.2"	0.5"	7.5"	0.011"
		MM	21	25	14	6	13	10	5.0

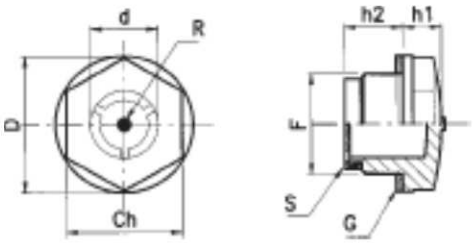

WFA Weld Flange

LWBA Weld Flange

For SAE & NPT Weld Port Flanges and Adapters see page 35-37a

LSD

Domed Oil Sights

- Transparent Polymide Material / Not compatible with Alcohol
- Maximum Operating Temperature 194°F (90°C) / Nitrile Seal, Fiber Seal
- Compatible with Petroleum Based Fluids, Gasoline, Fuel, and variety of Solvents
- NPT and BSP Threads available
- Maximum Pressure 44 PSI (3 Bar)

BSP Shown

Dimensional Detail

NPT MODEL	BSP MODEL	F		CH	D	d	H1	H2	TORQUE LB-FT/NM	WEIGHT LB/GM
LSD-6N	LSD-6	3/8"	IN	0.7"	0.9"	0.6"	0.6"	0.4"	6"	0.009"
			MM	19	22	15	16	10	8	4
LSD-8N	LSD-8	1/2"	IN	0.9"	1.1"	0.8"	0.7"	0.4"	9"	0.011"
			MM	24	28	20	17	10	12	5
	LSD-12	3/4"	IN	1.2"	1.4"	1"	0.8"	0.4"	12"	0.018"
			MM	30	35	25	20	10	16	8
LSD-16N	LSD-16	1"	IN	1.4"	1.7"	1.2"	0.9"	0.4"	12"	0.04"
			MM	36	42	31	24	10.5	16	18
	LSD-32	2"	IN			2.3"	1.3"	1.3"	12"	0.04"
			MM			59	32	32	16	18
	LSD-48	3"	IN			3.35"	2.5"	1.3"	12"	0.04"
			MM			85	63	32	16	18

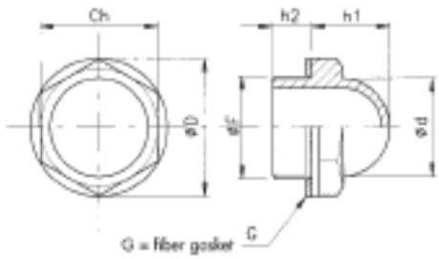

LSDF-32 2" BSP Weld Flange
LSDF-48 3" BSP Weld Flange

Magnetic Tank Cleaners

Multi Magnet Standard or Heavy Duty

Lenz magnetic tank cleaners pick up material that ordinary filters miss and thus maintain cleaner oil. The cleaner the oil, the less problems and expense incurred.

Exceptionally efficient, each unit is composed of a large ceramic magnet and two circular pole pieces.

Multi-magnet tank cleaners come in two models: standard and heavy-duty. Heavy-duty is recommended when support rods are long, power units are large or shipping abuse is anticipated. Although the magnetic unit is the same, heavy-duty is manufactured with a 5/8"-18 x 1" long thread solid steel support rod while the standard tank cleaner contains a 1/8" x 1" NPT long thread pipe size support rod.

To clean, simply use ordinary air hose using compressed air.

Order pipe plugs separately. Pipe plugs are optional and are furnished in 2 1/2" size. The minimum opening that will accommodate the unit is 2" pipe size or a hole approximately 2 1/4" in diameter. If desired, it can be installed in the cover of any opening larger than this.

Optional: Plug Part No. 40P (For Standard Rod)
HD40P (For Heavy Duty Rod)

Note** Special Rod Lengths Available

Demonstration of the Tank Cleaner's Magnetic Power

Standard Multi-Magnet 1000 Series

MODEL NO.		C	B	RESERVOIR CAPACITY
1001	IN MM	1.6" 41	6.6" 168	0-10
1002	IN MM	2.7" 69	7.7" 196	10-30
1003	IN MM	3.8" 97	8.8" 224	30-60
1004	IN MM	4.8" 122	9.8" 249	60-100
1005	IN MM	5.9" 150	10.9" 277	100-150
1006	IN MM	7" 178	12" 305	150-210
1007	IN MM	8" 203	13" 330	210-280
1008	IN MM	9.1" 231	14.1" 358	280-350

Heavy Duty Multi-Magnet 2000 Series

MODEL NO.		A	B	RESERVOIR CAPACITY
2001	IN MM	0.8" 20	5.8" 147	0-10
2002	IN MM	2" 51	7" 178	10-30
2003	IN MM	3" 76	8" 203	30-60
2004	IN MM	4.1" 104	9.1" 231	60-100
2005	IN MM	5.3" 135	10.3" 262	100-150
2006	IN MM	6.2" 157	11.2" 284	150-210
2007	IN MM	7.3" 185	12.3" 312	210-280
2008	IN MM	8.3" 211	13.3" 338	280-350

Steel Support Rods are 12L14
Stainless Support Rods are 303CD

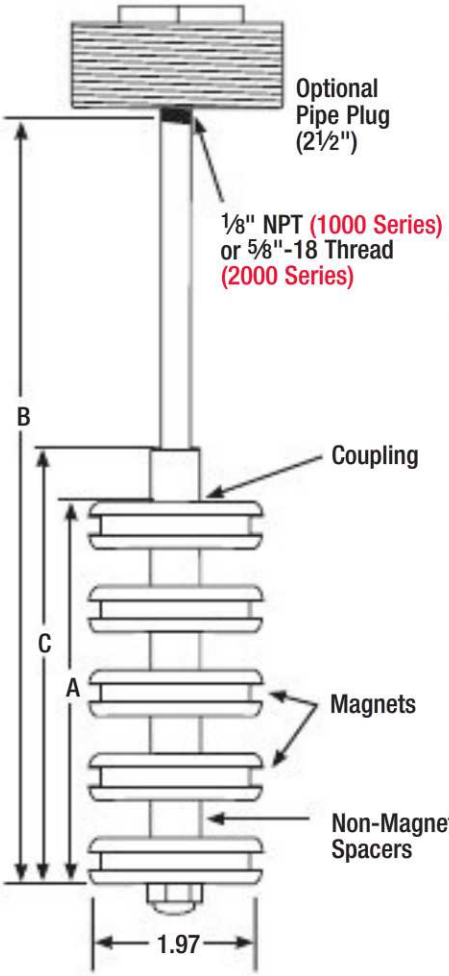

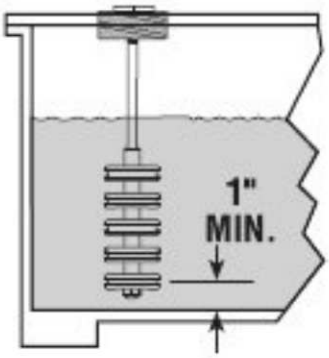

MULTI-MAGNET

TYPICAL INSTALLATION

Phone: 937/277-9364 FAX: 937/277-6516 www.lenzinc.com

Slim Line Magnet Tank Cleaners

In-Line Magnets Standard or Heavy-Duty

The primary difference between slim line and regular tank cleaners is in the smaller diameter of the slim line. Capable of being inserted into a hole tapped for a 3/4" plug, the cleaner is especially useful in small reservoirs, gear boxes and other applications where space is at a premium.

Since there is a ratio between length and diameter of a magnet for greatest power, each unit is designed to give maximum magnetic power possible in a small space.

Slim Line Tank Cleaners are available in two models: standard and heavy-duty. Although the magnetic unit is the same, heavy-duty (4000) is manufactured with a 5/8"-18 x 1" long thread solid steel support rod while the standard (3000) contains a 1/8" x 1" long thread NPT pipe size support rod.

To clean, simply remove from reservoir and wipe with a clean cloth every 3 to 6 months.

Order pipe plugs separately. Pipe plugs for installing in the top of the reservoir are optional and are furnished in 3/4" and 1 1/4". If space is available, it is recommended that the 1 1/4" plug be used for ease of removal.

3/4" Plug Part No.
12P (For Standard Rod)
HD 12P (For Heavy Duty Rod)

1 1/4" Plug Part No.
20P (For Standard Rod)
HD 20P (For Heavy Duty Rod)

Note** Special Rod Lengths Available

Standard Slim Line 3000 Series

MODEL NO.		A	B
3002	IN	6"	11"
	MM	152	279
3003	IN	8.5"	13.5"
	MM	216	343
3004	IN	11"	16"
	MM	279	406
3005	IN	13.5"	18.5"
	MM	343	470
3006	IN	16"	21"
	MM	406	533
3007	IN	18.5"	23.5"
	MM	470	597
3008	IN	21"	26"
	MM	533	660
3009	IN	23.5"	28.5"
	MM	597	724
3010	IN	26"	31"
	MM	660	787

Heavy Duty Slim Line 4000 Series

MODEL NO.		A	B
4002	IN	5.8"	10.8"
	MM	147	274
4003	IN	8.3"	13.3"
	MM	211	338
4004	IN	10.8"	15.8"
	MM	274	401
4005	IN	13.3"	18.3"
	MM	338	465
4006	IN	15.8"	20.8"
	MM	401	528
4007	IN	18.3"	23.3"
	MM	465	592
4008	IN	20.8"	25.8"
	MM	528	655
4009	IN	23.3"	28.3"
	MM	592	719
4010	IN	25.8"	30.6"
	MM	655	777

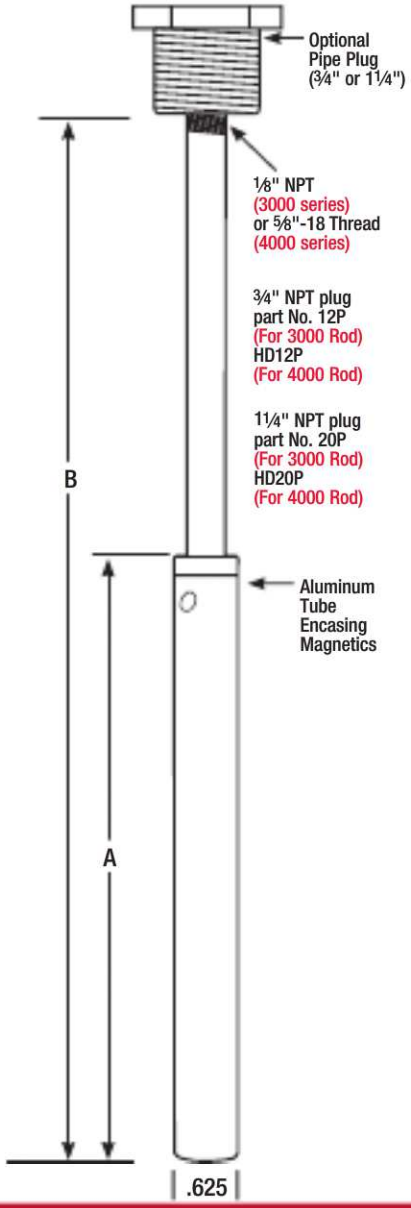

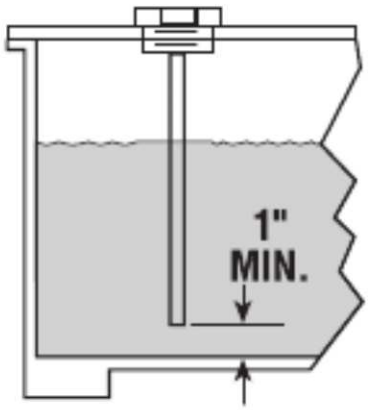

SLIM-LINE

TYPICAL INSTALLATION

Steel Support Rods are 12L14
Stainless Support Rods are 303CD

High Pressure

LHBV SERIES

Carbon Steel Body Zinc Plated (1/4" - 1 1/4" Port Sizes)

- Forged Body (1 1/2", 2 Port sizes)
- Full Port Sizes
- Hard Chrome Plated Steel Ball
- Delrin +MoS2 Ball Seals
- Viton "O"-Ring
- NPT, SAE
- Operating Pressures to 7250 PSI (500 Bar) see chart
- Operating Temperature -20° F to 212° F (-12° C to 100° C)

Options

- Lock Kits
- Stainless Steel
- Temperature Range -60° F to 400° F (-50 C to 200 C depending upon seal material)

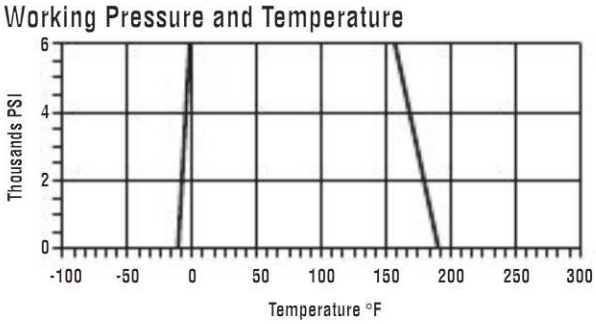

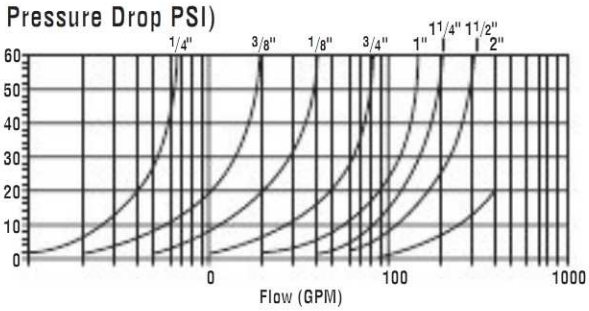

Dimensional Detail

MODEL N UMBER	SAE MODEL	PORT SIZE	WORKING PRESSURE		A	B	C	D	E	F	WEIGHT LBS/KG
LHBV-4	LBVA-4	1/4"	7500	IN	1"	0.2"	4.6"	1.2"	1.3"	2.7"	0.8"
				MM	10	5	24	30	80	44	0.4
LHBV-6	LBVA-6	3/8"	7500	IN	1.3"	0.4"	4.6"	1.2"	1.5"	3.1"	1.1"
				MM	10	10	24	30	80	44	0.5
LHBV-8	LBVA-8	1/2"	5000	IN	1.4"	0.5"	4.6"	1.2"	1.6"	4.1"	1.4"
				MM	15	13	31	30	80	51	0.6
LHBV-12	LBVA-12	3/4"	5000	IN	1.9"	0.8"	7.2"	1.8"	2.2"	4.3"	3.3"
				MM	20	20	37	46	113	57	1.5
LHBV-16	LBVA-16	1"	5000	IN	2.3"	0.9"	7.2"	2"	2.6"	4.6"	4.4"
				MM	25	23	45	51	113	70	2
LHBV-20	LBVA-20	1 1/4"	5000	IN	3"	0.9"	8.5"	2.5"	3.3"	4.3"	4.6"
				MM	32	23	57	64	138	81	2.1
LHBV-24	LBVA-24	1 1/2"	5000	IN	3.6"	0.9"	8.5"	2"	3.9"	5.1"	13"
				MM	40	23	70	51	138	94	5.9
LHBV-32	LBVA-32	2"	5000	IN	4.2"	0.9"	8.5"	2.9"	4.4"	5.5"	19"
				MM	45	23	84	74	157	112.5	8.6

REPLACEMENT HANDLES	Size	REPLACEMENT SEALS	LOCKING KITS
BVH-4	1/4"	BVH-SK-4	LK-1
BVH-6	3/8"	BVH-SK-6	LK-1
BVH-8	1/2"	BVH-SK-8	LK-1
BVH-12	3/4"	BVH-SK-12	LK-2
BVH-16	1"	BVH-SK-16	LK-2
BVH-20	1 1/4"	BVH-SK-20	LK-2
BVH-24	1 1/2"	BVH-SK-24	LK-3
BVH-32	2"	BVH-SK-32	LK-3

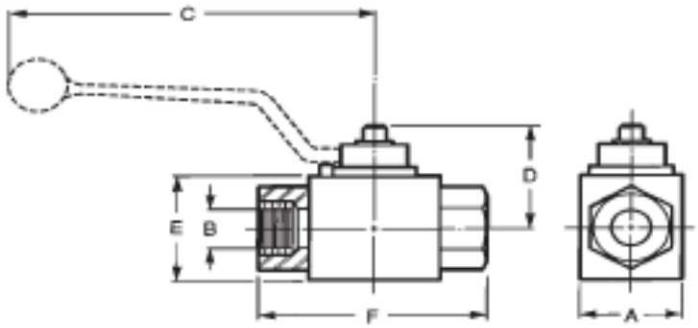

Phone: 937/277-9364 FAX: 937/277-6516 www.lenzinc.com

Low Pressure Ball Valves

Model LPBV

- 1/4" through 4" NPT Full ported
- Forged Brass body nickel plated
- Blow out proof stems
- Pressures to 735 PSI (50 bar)
- Teflon ball and stem seals
- Suitable for oil, water, gas, fuel, gasoline, acid, and compressed air
- Operating temperatures -22° F to +350° F (-30C to +162 C)
- Quarter Turn
- Locking and Stainless valves consult the factory

Dimensional Detail

MODEL NUMBER	NPT THREAD	WORKING PRESSURE		A	B	C	D1	E1	F	G	WEIGHT LBS/KG
LPBV-4	1/4"	735	IN	0.4"	1.7"	0.9"	1.5"	3.1"	0.9"	0.9"	0.3
			MM	10	44.4	23.5	37	80	22.2	22.2	0.1
LPBV-6	3/8"	735	IN	0.4"	1.7"	0.9"	1.5"	3.1"	0.9"	0.9"	0.3
			MM	10	44.4	24	37	80	22.2	22.2	0.1
LPBV-8	1/2"	735	IN	0.6"	2"	1.2"	1.6"	3.1"	1"	1"	0.4
			MM	15	51	30.5	41	80	25.5	25.5	0.2
LPBV-12	3/4"	590	IN	0.8"	2.2"	1.5"	2.2"	4.4"	1.1"	1.2"	0.7
			MM	20	57	37	55	113	28	29.5	0.3
LPBV-16	1"	590	IN	1"	2.8"	1.8"	2.3"	4.4"	1.4"	1.4"	1
			MM	25	70	45.5	59	113	35	35	0.5
LPBV-20	1 1/4"	440	IN	1.3"	3.2"	2.2"	2.9"	5.4"	1.6"	1.6"	2
			MM	32	80.5	57	74.5	137.5	40.5	40	0.9
LPBV-24	1 1/2"	440	IN	1.6"	3.7"	2.8"	3.2"	5.4"	1.9"	1.8"	3
			MM	40	94	70	80.5	137.5	47.5	46.5	1.4
LPBV-32	2"	370	IN	1.8"	4.4"	3.3"	3.8"	6.2"	2.2"	2.2"	4
			MM	45	112.5	84	96.5	157	57	55.5	1.8
LPBV-40	2 1/2"	265	IN	2.1"	5"	3.8"	4.3"	7.8"	2.5"	2.5"	8
			MM	54	128	96	109	197	63.5	64.5	3.6
LPBV-48	3"	205	IN	2.6"	5.8"	4.7"	5"	9.8"	2.9"	2.9"	13
			MM	65	148	119	126	250	73.5	74.5	5.9
LPBV-64	4"	180	IN	3.1"	6.7"	5.4"	5.3"	9.8"	3.3"	3.3"	22
			MM	80	169	138	135	250	85	84	10

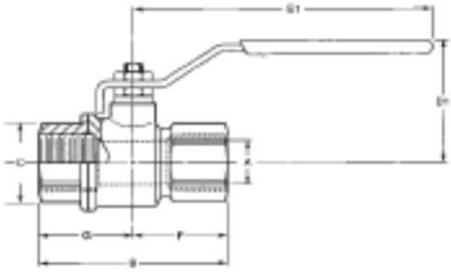

ABV Lenz Air Bleeder Valves

Tapered Pipe Thread SAE Straight Thread

The Lenz Air Bleeder Valve is an exclusive design, extremely compact and consisting of only two metal parts. No packings are employed. The fact that it is necessary to eliminate all air from lines and equipment in order to maintain maximum operating efficiency makes this valve an important and vital part of the hydraulic system. It needs only to be installed at the highest point in the circuit where the air accumulates. It is especially needed when starting a hydraulic system. Easily installed.

Tapered Pipe Thread

SAE Straight Thread

Note: When Ordering Lenz Air Bleeder Valves in Stainless Steel Add -SS. Example: 4ABV-SS.

ABV Lenz Air Bleeder Valves

Model No.	Port	Measurements	Hex A	Length B
2-ABV	1/8" NPT	IN	0.69"	1.69"
		MM	18	43
4-ABV	1/4" NPT	IN	0.69"	1.9"
		MM	18	48
6-ABV	3/8" NPT	IN	0.69"	1.9"
		MM	18	48
A-6ABV	9/16"-18 SAE	IN	0.88"	1.69"
		MM	22	43
8-ABV	1/2" NPT	IN	0.69"	1.88"
		MM	18	48

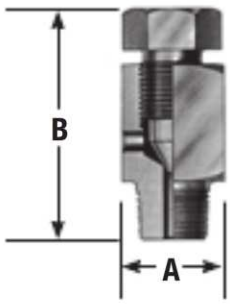

4-Bolt Flanged Head Fittings

For Pipe

Length: Inches - Black;
Millimeters - Red.
Pressure: PSI - Black;
Megapascals - Red.

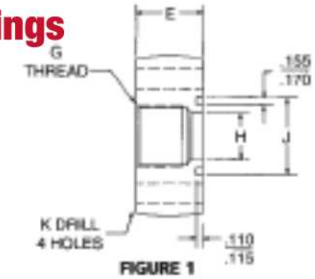

FIGURE 1

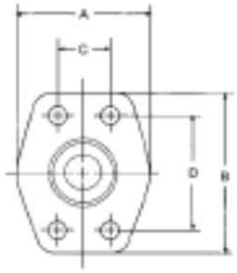

All measurements are in inches.

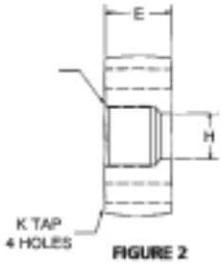

FIGURE 2

3000 PSI NPTF Female Thread - Drilled Holes - "O"-Ring Figure 1 & 2

O-Ring Part No. Fig. 1	Flat Face Part No. Fig. 2	Pipe Size	Pad Size	A	B	C	D	E	F	H Dia.	J Dia.	K Dia.	L Dia. Spot Face	NPTF Thread	* O Ring Part Number	* Socket Head Cap Screw Part Number	* Hi Collar Lock Washer Part Number
W43-8-8	W104-8-8	.50	.50	1.81	2.12	.688	1.500	1.25	.91	.50	1.000	.344	.500	.50	M345-15	M477-10	M478-4
		12.7	12.7	46.0	53.8	17.48	38.10	31.8	23.1	12.7	25.40	8.74	12.70	12.7			
W43-12-12	W104-12-12	.75	.75	2.06	2.56	.875	1.875	1.25	.84	.75	1.250	.406	.594	.75	M345-19	M477-5	M478-1
		19.0	19.0	52.3	65.0	22.23	47.63	31.8	21.3	19.0	31.75	10.31	15.09	19.0			
W43-16-16	W104-16-16	1.00	1.00	2.31	2.75	1.031	2.062	1.38	.97	1.00	1.560	.406	.594	1.00	M345-24	M477-6	M478-1
		25.4	25.4	58.7	69.8	26.19	52.37	35.0	24.6	25.4	39.62	10.31	15.09	25.4			
W43-20-20	W104-20-20	1.25	1.25	2.88	3.12	1.188	2.312	1.50	1.03	1.25	1.750	.469	.688	1.25	M345-27	M477-7	M478-2
		31.8	31.8	73.2	79.2	30.18	58.72	38.1	26.2	31.8	44.45	11.91	17.48	31.8			
W43-24-24	W104-24-24	1.50	1.50	3.25	3.69	1.406	2.750	1.62	1.09	1.50	2.120	.531	.781	1.50	M346-3	M477-4	M478-3
		38.1	38.1	82.6	93.7	35.71	69.85	41.1	27.7	38.1	53.85	13.49	19.84	38.1			
W43-32-32	W104-32-32	2.00	2.00	3.81	4.00	1.688	3.062	1.62	1.09	2.00	2.495	.531	.781	2.00	M346-6	M477-4	M478-3
		50.8	50.8	96.8	101.6	42.88	77.77	41.1	27.7	50.8	63.37	13.49	19.84	50.8			
W43-40-40	W104-40-40	2.50	2.50	4.28	4.50	2.000	3.500	2.00	1.47	2.50	3.000	.531	.781	2.50	M346-10	M477-9	M478-3
		63.5	63.5	108.7	114.3	50.80	88.90	50.8	37.3	63.5	76.20	13.49	19.84	63.5			
W43-48-48	W104-48-48	3.00	3.00	5.16	5.31	2.438	4.188	2.25	1.59	3.00	3.620	.656	.969	3.00	M346-15	M477-11	M478-5
		76.2	76.2	131.1	134.9	61.93	106.38	57.2	40.4	76.2	91.95	16.66	24.61	76.2			

These parts are not supplied under fitting Catalog Number. Must be ordered separately.

SAE FOUR BOLT FLANGE KITS

Code 61

Size	Lenz P/N
3/4"	W43-12-12K
1"	W43-16-16K
1 1/4"	W43-20-20K
1 1/2"	W43-24-24K
2"	W43-32-32K
2 1/2"	W43-40-40K

Code 61

Size	Lenz P/N
3/4"	W4-12-12K
1"	W4-16-16K
1 1/4"	W4-20-20K
1 1/2"	W4-24-24K
2"	W4-32-32K
2 1/2"	W4-40-40K
3"	W4-48-48K

SPLIT FLANGE KITS

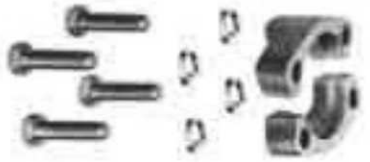

Code 61

Size	Lenz P/N
3/4"	12SFK
1"	16SFK
1 1/4"	20SFK
1 1/2"	24SFK
2"	32SFK

Code 62

Size	Lenz P/N
3/4"	12SFXK
1"	16SFXK
1 1/4"	20SFXK
1 1/2"	24SFXK
2"	32SFXK

4-bolt Flanged Head Fittings

For Pipe

Length: Inches - Black;
Millimeters - Red.
Pressure: PSI - Black;
Megapascals - Red.

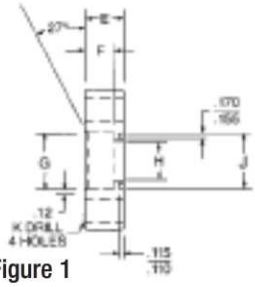

Figure 1

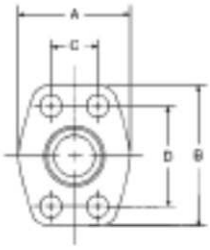

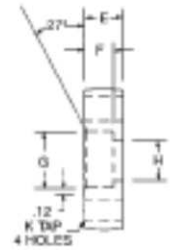

Figure 2

3000 PSI Flat Socket - Pipe (Code 61) Figure 1 & 2

O-Ring Part Number Fig. 1	Flat Face Fig. 2	Pipe Size	Pad Size	A	B	C ±.010	D ±.010	E	F	G Dia. +.015 -.005	H Dia.	J Dia.	K Dia.	* O Ring Part Number	* Socket Head Cap Screw Part Number	* Hex Head Cap Screw Part Number	* Hi Collar Lock Washer Part Number
W4-8-8	W61-8-8	.50	.50	1.813	2.125	.688	1.500	.75	.56	.855	.50	1.000	.344	M345-15	M477-10	M522-11	M478-4
		12.7	12.7	46.0	53.9	12.0	38.1	19.0	14.2	21.7	12.7	25.4	8.73				
W4-12-12	W61-12-12	.75	.75	2.06	2.56	.875	1.875	.75	.19	1.062	.75	1.250	.406	M345-19	M477-5	M522-11	M478-1
		19.0	19.0	52.3	65.0	22.23	47.63	19.0	4.8	26.97	19.0	31.75	10.31				
W4-16-16	W61-16-16	1.00	1.00	2.31	2.75	1.031	2.062	.88	.25	1.328	1.00	1.560	.406	M345-24	M477-6	M522-12	M478-1
		25.4	25.4	58.7	69.8	26.19	52.37	22.4	6.4	33.73	25.4	39.62	10.31				
W4-20-20	W61-20-20	1.25	1.25	2.88	3.12	1.188	2.312	.94	.25	1.672	1.25	1.750	.469	M345-27	M477-7	M522-13	M478-2
		31.8	31.8	73.2	79.2	30.18	58.72	23.9	6.4	42.47	31.8	53.85	13.49				
W4-24-24	W61-24-24	1.50	1.50	3.25	3.69	1.406	2.750	1.19	.44	1.922	1.50	2.120	.531	M346-3	M477-8	M522-14	M478-3
		38.1	38.1	82.6	93.7	35.71	69.85	30.2	11.2	48.82	38.1	53.85	13.49				
W4-32-32	W61-32-32	2.00	2.00	3.81	4.00	1.688	3.062	1.38	.50	2.406	2.00	2.495	.531	M346-6	M477-9	M522-15	M478-3
		50.8	50.8	96.8	101.6	42.88	77.77	35.0	12.7	61.11	50.8	633.7	13.49				
W4-40-40	W61-40-40	2.50	2.50	4.28	4.50	2.000	3.500	1.75	.75	2.906	2.50	3.000	.531	M346-10	M477-14	M522-16	M478-3
		63.5	63.5	108.7	114.3	50.80	88.90	44.4	19.0	73.81	63.5	76.20	13.49				
W4-48-48	W61-48-48	3.00	3.00	5.16	5.31	2.438	4.188	2.12	.88	3.547	3.00	3.620	.656	M346-15	M477-16	M522-18	M478-5
		76.2	76.2	131.1	134.9	61.93	106.38	53.8	22.4	90.09	76.2	91.95	16.66				

6000 PSI Flat Socket - Pipe (Code 62) Figure 1 & 2

O-Ring Fig. 1 Part Number	Flat Face Fig. 2 Part Number	Pipe Size	Pad Size	A	B	C	D	E	F	G	H	K Thread UNC-2B	* O Ring Part Number	* Socket Head Cap Screw Part Number	* Hex Head Cap Screw Part Number	* Hi Collar Lock Washer Part Number
W59-8-8	W60-8-8	0.50	0.50	1.94	2.30	0.718	1.594	0.870	0.560	0.855	0.500	5/16-18	M345-15	M477-10	M522-11	M478-4
		12.7	12.7	49.2	58.4	18.2	40.4	22.1	14.2	21.72	12.7					
W59-12-12	W60-12-12	0.75	0.75	2.38	2.81	0.937	2.00	1.250	0.560	1.063	0.750	3/8-16	M345-19	M477-23	M522-11	M478-1
		19.0	19.0	60.4	71.3	23.8	50.13	31.7	14.22	27.0	19.0					
W59-16-16	W60-16-16	1.00	1.00	2.75	3.19	1.094	2.250	1.00	.38	1.33	1.00	7/16-14	M345-24	M477-29	M522-13	M478-2
		25.4	25.4	69.8	81.0	27.79	57.15	25.4	9.6	33.8	25.4					
W59-20-20	W60-20-20	1.25	1.25	3.06	3.75	1.250	2.625	1.25	.56	1.67	1.25	1/2-13	M345-27	M477-7	M522-14	M478-3
		31.8	31.8	77.7	95.2	31.75	66.68	31.8	14.2	42.4	31.8					
W59-24-24	W60-24-24	1.50	1.50	3.75	4.44	1.438	3.125	1.50	.75	1.92	1.50	5/8-11	M346-3	M477-11	M522-19	M478-5
		38.1	38.1	95.2	112.8	36.53	79.38	38.1	19.0	48.8	38.1					
W59-32-32	W60-32-32	2.00	2.00	4.50	5.25	1.750	3.812	1.75	.88	2.41	2.00	3/4-10	M346-6	M477-17	M522-20	M478-7
		50.8	50.8	114.3	133.4	44.45	96.82	44.4	22.4	61.2	50.8					

500 PSI Flat Socket - Pipe Figure 1 & 2

O-Ring Fig. 1 Part Number	Flat Face Fig. 2 Part Number	Pipe Size	Pad Size	A	B	C ±.010	D ±.010	E	F	G Dia. +.015 -.005	H Dia.	J Dia.	K Dia.	* O Ring Part Number	* Socket Head Cap Screw Part Number	* Hex Head Cap Screw Part Number	* Hi Collar Lock Washer Part Number
W72-48-48	W91-48-48	3.00	3.00	5.12	5.31	2.438	4.188	1.38	.25	3.547	3.00	3.620	.656	M346-15	M477-20	M522-24	M475-5
		76.2	76.2	130.5	134.9	61.93	106.38	35.0	6.4	90.09	76.2	91.95	16.68				
W72-56-56	W91-56-56	3.50	3.50	5.50	6.00	2.750	4.750	1.44	.25	4.047	3.50	4.105	.656	M346-19	M477-20	M522-24	M478-5
		88.9	88.9	139.7	152.4	69.85	120.65	36.6	6.4	102.79	88.9	104.26	16.66				
W72-64-64	W91-64-64	4.00	4.00	6.00	6.38	3.062	5.125	1.50	.25	4.578	4.00	4.605	.656	M346-23	M477-11	M522-19	M478-5
		101.6	101.6	152.4	162.1	77.77	130.18	38.1	6.4	116.28	101.6	116.97	16.66				

4-Bolt Flanged Head Fittings

For Pipe

Length: Inches - Black;
Millimeters - Red.
Pressure: PSI - Black;
Megapascals - Red.

FIGURE 1

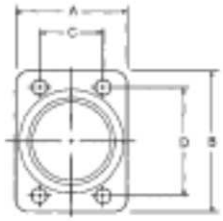

FIGURE 2

3000 PSI Deep Socket - Tapped Holes Figure 1 & 2

O-Ring Part No. Fig. 1	Flat Face Part No. Fig. 2	Pipe Size	Pad Size	A	B	C	D	E	F	G Dia.	H Dia.	J	K Thread UNC-2B	* O Ring Part Number	* Socket Head Cap Screw Part Number	* Hex Head Cap Screw Part Number	* Hi Collar Lock Washer Part Number
W31-12-12	W3-12-12	.75 19.0	.75 19.0	1.69 42.9	2.56 65.0	.875 22.23	1.875 47.63	1.06 26.9	.50 12.7	1.062 26.97	.75 19.0	.50 12.7	3/8-16	M345-19	M477-5	M522-11	M478-1
W31-16-16	W3-16-16	1.00 25.4	1.00 25.4	1.94 49.3	2.75 69.8	1.031 26.19	2.062 52.37	1.25 31.8	.56 14.2	1.328 33.73	1.00 25.4	.62 15.7	3/8-16	M345-24	M477-6	M522-12	M478-1
W31-20-20	W3-20-20	1.25 31.8	1.25 31.8	2.19 55.6	3.12 79.2	1.188 30.18	2.312 58.72	1.44 36.6	.62 15.7	1.672 42.47	1.25 31.8	.75 19.0	7/16-14	M345-27	M477-7	M522-13	M478-2
W31-24-24	W3-24-24	1.50 38.1	1.50 38.1	2.56 65.0	3..69 93.7	1.406 35.71	2.750 69.85	1.75 44.4	.81 20.6	1.922 48.82	1.50 38.1	1.00 25.4	1/2-13	M346-3	M477-8	M522-14	M478-3
W31-32-32	W3-32-32	2.00 50.8	2.00 50.8	3.06 77.7	4.00 101.6	1.688 42.88	3.062 77.77	2.00 50.8	1.06 26.9	2.406 61.11	2.00 50.8	1.12 28.4	1/2-13	M346-6	M477-9	M522-15	M478-3
W31-40-40	W3-40-40	2.50 63.5	2.50 63.5	3.56 90.4	4.50 114.3	2.000 50.80	3.500 88.90	2.31 58.7	1.12 28.4	2.906 73.81	2.50 63.5	1.31 33.3	1/2-13	M346-10	M477-14	M522-16	M478-3

For Fittings
(SAE J515)

Part Number	Tube O.D. Ref.	I.D. A	Cross Section B
M383-4	.25	.351	.072
M383-5	.31	.414	.072
M383-6	.38	.468	.078
M383-8	.50	.644	.087
M383-10	.62	.755	.097
M383-12	.75	.924	.116
M383-14	.88	1.048	.116
M383-16	1.00	1.171	.116
M383-20	1.25	1.475	.118
M383-24	1.50	1.720	.118

O-RING

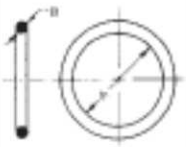

"O"-Rings
Length - Inches - Black
Millimeters - Red
Pressure - PSI Black
Megapascals - Red

For Split Flange Clamp Heads
(SAE J518)

Part Number	Flange Size	A	B
M345-15	.50	.75	.12
M345-19	.75	1.00	.12
M345-24	1.00	1.31	.12
M345-27	1.25	1.50	.12
M346-3	1.50	1.88	.12
M346-6	2.00	2.25	.12
M346-10	2.50	2.75	.12
M346-15	3.00	3.38	.12
M346-19	3.50	3.88	.12
M346-23	4.00	4.38	.12

Also Available
4-bolt flanged-head fittings

For Pipe
3000 PSI Saddle - Drilled Holes
3000 PSI 90 Elbow - Tapped Holes 3000 PSI 90 Elbow - Drilled Holes 3000 PSI Boss - Drilled Holes
3000 PSI 90 Elbow NPTF Female Thread - Drilled Hole

For Tube
3000 PSI Flat Socket - Drilled Holes
3000 PSI Deep Socket - Tapped Holes
3000 PSI Saddle - Tapped Holes
3000 PSI Saddle - Drilled Holes
3000 PSI 90 Elbow - Tapped Holes 3000 PSI 90 Elbow - Drilled Holes

4-bolt flanged-head fittings and components.

For Pipe and Tube
3000 PSI Tank Pilot - Tapped Holes
Weld Pipe Plug
Flange Plug
Hex Head Cap Screws
Socket Head Cap Screws

4-bolt flanged-head components

For Pipe and Tube
Spring Lock Washers
High Collar Spring Lock Washers
"O"-Rings
Connector Plates

Phone: 937/277-9364 FAX: 937/277-6516 www.lenzinc.com

Split Flange Halves

For SAE Flanged Head Connection

Length: Inches - Black;
Millimeters - Red.
Pressure: PSI - Black;
Megapascals - Red.
Bolt Torque Range;
Pounds/Inches - Black;
Newton-meters - Red.

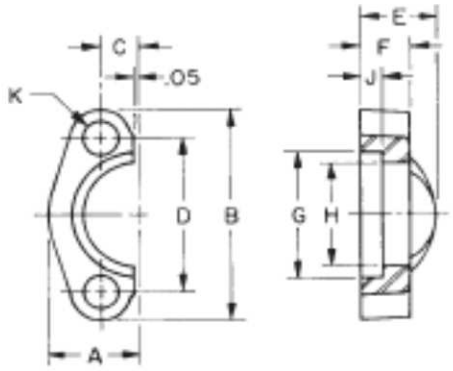

FIGURE 1

SAE Standard 3000 PSI (SAE J518 Code 61) Figure 1

Flange Part Number Fig. 1	Flange Size	A .03	B .03	C .01	D .010	E .03	F .03	G .010	H .010	J	K Dia.	* Bolt Part Number	* Lock Washer Part Number	Heck Bolt Torque Range (LB-IN)	Max Rec. Working Press (PSI)
8SF-2	.50	.86	2.12	.344	1.500	.75	.50	1.219	.955	.245	.344	M522-1	5LW	175-225	5000
	12.7	21.8	53.8	8.74	38.10	19.0	12.7	30.96	24.26	6.22	8.74				
12SF-2	.75	.98	2.56	.438	1.875	.88	.56	1.531	1.265	.245	.406	M522-2	6LW	250-350	5000
	19.0	24.9	65.0	11.13	47.63	22.4	14.2	38.89	32.13	6.22	10.31				
16SF-2	1.00	1.11	2.75	.515	2.062	.94	.62	1.781	1.515	.295	.406	M522-2	6LW	325-425	5000
	25.4	28.2	69.8	13.08	52.37	23.9	15.7	45.24	38.48	7.49	10.31				
20SF-2	1.25	1.39	3.12	.594	2.312	.88	.56	2.031	1.720	.295	.469	M522-3	7LW	425-550	4000
	31.8	35.3	79.2	15.09	58.72	22.4	14.2	51.59	43.69	7.49	11.91				
24SF-2	1.50	1.58	3.69	.703	2.750	1.00	.62	2.406	2.000	.297	.531	M522-4	8LW	550-700	3000
	38.1	40.1	93.7	17.86	69.85	25.4	15.7	61.11	50.80	7.54	13.49				
32SF-2	2.00	1.86	4.00	.844	3.062	1.03	.62	2.844	2.470	.355	.531	M522-4	8LW	650-800	3000
	50.8	47.2	101.6	21.44	77.77	26.2	15.7	72.24	62.74	9.02	13.49				
40SF-2	2.50	2.09	4.50	1.000	3.500	1.50	.75	3.344	2.950	.355	.531	M522-5	8LW	950-1100	2500
	63.5	53.1	114.3	25.40	88.90	38.1	19.1	84.94	74.93	9.02	13.49				
48SF-2	3.00	2.53	5.31	1.219	4.188	1.62	.88	4.031	3.580	.355	.656	M522-7	10LW	1650-1800	2000
	76.2	64.3	134.9	30.96	106.38	41.1	22.3	102.39	90.93	9.02	16.66				
56SF-2	3.50	2.70	6.00	1.375	4.750	1.12	.88	4.531	4.030	.422	.656	M522-8	10LW	1400-1600	500
	88.9	68.6	152.4	34.93	120.65	28.4	22.3	115.09	102.36	10.72	16.66				

SEE PAGE 28 FOR KITS

6000 PSI (SAE J518 Code 62) Figure 1

Flange Part Number Fig. 1	Flange Size	A .03	B .03	C .01	D .010	E .03	F .03	G .010	H .010	J	K Dia.	* Bolt Part Number	* Lock Washer Part Number	Heck Bolt Torque Range (LB-IN)	Max Rec. Working Press (PSI)
12SFX-2	.75	1.14	2.81	.469	2.000	1.12	.75	1.656	1.280	.325	.406	M522-1	6LW	300-400	6000
		19.0	29.0	71.4	11.91	50.80	28.4	19.0	42.06	32.51	8.26	10.31			
16SFX-2	1.00	1.33	3.19	.547	2.250	1.31	.94	1.906	1.530	.355	.469	M522-13	7LW	500-600	6000
		25.4	33.8	81.0	13.89	57.15	33.3	23.9	48.41	38.86	9.02	11.91			
20SFX-2	1.25	1.48	3.75	.625	2.625	1.50	1.06	2.156	1.750	.385	.531	M522-5	8LW	750-900	6000
		31.8	37.6	95.2	15.88	66.68	38.1	26.9	54.76	44.45	9.78	13.49			
24SFX-2	1.50	1.83	4.44	.719	3.125	1.69	1.19	2.531	2.030	.475	.656	M522-9	10LW	1400-1600	6000
		38.1	46.5	112.8	18.26	79.38	42.9	30.2	64.29	51.56	12.07	16.66			
32SFX-2	2.00	2.20	5.25	.875	3.812	2.06	1.44	3.156	2.660	.475	.781	M522-26	12LW	2400-2600	6000
		50.8	55.9	133.4	22.23	96.82	52.3	36.6	80.16	67.56	12.07	19.84			

These parts are not supplied under fitting Catalog Number. Must be ordered separately.
To order two split flange halves plus hardware, drop the -2 after the SF or SFX.

SEE PAGE 28 FOR KITS

Notes

Hydraulic Tank Accessories Technical Bulletins

TB.TA01.708	AN-WB Weld Bushings
TB.TA02.708	LWBA Weld Adapters
TB.TA03.708	Hydraulic Necks & Caps
TB.TA04.708	Diesel Necks & Caps
TB.TA05.708	High Pressure Ball Valve Locking Kit
TB.TA06.708	LLG & T-LLG Sight Level Gauge Instructions
TB.TA07.708	Filler Breather Filters
TB.TA08.708	Suction, Return Flanges, Return Bushings
TB.TA09.708	Fluid Level & Temperature Gauges
TB.TA10.708	Pressurized Filler Breathers
TB.TA11.708	Anti Splash Filler Breathers
TB.TA12.708	LSD, LSG, LLG 3,5 Material Compatibility
TB.TA13.708	Seal Compatibility Guide
TB.TA14.708	TC-6 Installation Instructions
TB.TA15.708	Temperature Conversion Chart
TB.TA16.708	Chromium Free Plating
TB.TA17.708	Diesel Fill Necks
TB.TA18.811	PV-601 Installation Instructions
TB.TA19.811	AS-NY-4 Anti Splash Breather
TB.TA20.811	Breather Assewmbly Instructions
TB.TA21.811	R.E.A.C.H. Compliance
TB.TA22.811	Super Filler Assembly
TB.TA23.811	550 Level Gauge Installation
TB.TA24.811	Side Mount Installation

PRESSURE GAUGES

GLYCERINE FILLED GAUGES
DRY GAUGES
PROCESS GAUGES
PRESSURE TRANSMITTERS
WATER GAUGES
GAUGE ISOLATORS
SIPHONS
CHEMICAL SEALS
BI METAL THERMOMETERS
AMMONIA GAUGES

Pressure Gauges Table of Contents

SERIES	PRESSURE GAUGES	SECTION C Page
PG	Product Overview Index	
PG	Features of Lenz Gauges	1c
BAC-25	Glycerine 2.5" Dial Brass Case	2c
AFC-25	Glycerine 2.5" Dial Stainless Case	3c
SS-25	Glycerine 2.5" Dial Stainless Case & Internals	4c
AFC-20	Glycerine 2" Dial Stainless Case	5c
LZ15, LZ20	Dry 1.5" & 2" Dial ABS Case	6c
LZ-25	Dry 2.5" Dial Steel Case	7c
BAC-4	Glycerine 4.0" Dial Brass Case	8c
AFC-4	Glycerine 4.0" Dial Stainless Case	9c
SS-4	Glycerine 4.0" Dial Stainless Case & Internals	10c
PRO 45	Process 4.5" Dial, ABS Case	11c
AMM-25	Dry 2.5" Refrigeration Stainless Case	11c
LOW-25	Dry 2.5" Dial, Steel Capsule & Case	12c
BMT	Bi-Metal, 3" & 5" Dial Stainless Case	13c
LZAT	Transmitters	14c/15c
LDPG-30	Digital Gauge	16c-18c
GV	Gauge Isolators, Gauge Shutoff	19c
LGS, SIP, HDS, MS	Siphons, Chemical Seals, Gauge Snubber	20c
	Gauge Options	21c
	Custom Dials, Website, Technical Bulletin	22c

Phone: 937/277-9364 FAX: 937/277-6516 www.lenzinc.com

Built For SUPERIOR Performance

BAC

AFC

SS

Lenz offers you a pressure gauge that gives extra long life and superior performance under the most difficult job conditions.

The Lenz Series Glycerin-Filled Gauges offer you the finest choice in gauges where severe pulsation, vibration and corrosive atmosphere are factors. The glycerin serves to permanently lubricate and prevent corroding of the movement, effectively dampens pulsation and vibration to the degree that there is no pointer flutter or oscillation. Completely sealed . . . steam, gas or any fluids are kept out, there is never any condensation and clear visibility of the dial is always assured.

These gauges will last years and years longer than ordinary gauges and provide accurate and positive reading at all times. The built-in dampening mechanism requires no adjustment after installation . . . there is nothing better.

While principally offered to the hydraulics field, these gauges have many other applications in refineries, petrochemicals, and in many manufacturing industries.

Rugged, accurate and dependable, these Lenz pressure gauges promise the reliable, long-term service and performance required by today's diversified needs.

Outstanding Features of Lenz Pressure Gauges

- ***Glycerin or Silicone should not be used in applications involving oxidizing media such as oxygen, chlorine, nitric acid, hydrogen peroxide and others, because of the danger of a spontaneous chemical reaction.***

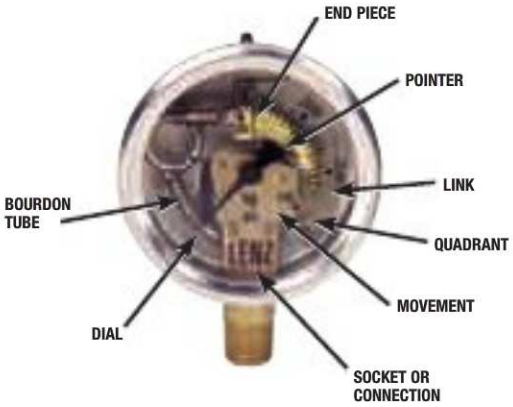

DIAL FACE
White coated aluminum face with black coated aluminum pointer.

UNBREAKABLE LENS
Completely sealed unbreakable plexiglass lens gives long life under the most rugged conditions.

BOURDON TUBE
Copper alloy up to 800 P.S.I. safety coiled copper alloy for 800 P.S.I. and higher.

BOURDON TUBE 4" GAUGE
Copper alloy up to 1500 P.S.I. safety coiled alloy steel, 1500 P.S.I. and higher.

SERVICE
In case blow-out plug operation is necessary, the gauge can be serviced in the field for refilling glycerin.

SUPERIOR BRASS MOVEMENT
Precision machined and highly finished bearing surfaces are practically frictionless providing dependable accuracy. The movement of all internal parts is permanently sealed and dampened by the glycerin fluid. The effects of pulsation and vibration are virtually eliminated. No pointer flutter.

SAFETY BLOW-OUT PLUG
A rubber disc relief valve, located on top of the gauge, vents case pressure build-up at 5 P.S.I.. Acts as a filler cap.

RESTRICTOR
Assists in dampening, acts much like a pressure snubber.

INDIVIDUALLY PACKED

Boxed in rugged corrugated mailer type boxes for protection during shipping or on the shelf.

HOW TO SELECT THE PROPER GAUGE-

The proper gauge for your application should read at least 60% above the maximum pressure of the system so that the maximum reading would be approximately in the middle of the dial.
To order a gauge: (I) Select the type of gauge; (2) Choose the dial size; (3) Determine the pressure range from appropriate table; (4) Give correct model number from same tables; (5) Add suffix "FF" for Brass Front Flange, "FFC" for Chrome Front Flange and "UC" for U-Clamp to Model Number.

FRONT FLANGES

Flanges ordered with gauge are installed at factory.
May be purchased separately and added at a later date.
Dimensions: For $2^{1}/_{2}$" Gauge Flange - (3) $^{9}/_{64}$" Holes On $2^{15}/_{16}$" Bolt Circle. $3^{5}/_{16}$" O.D.
Dimensions: For 4" Gauge Flange - (3) $^{3}/_{16}$" Holes On $4^{9}/_{16}$" Bolt Circle, $5^{3}/_{16}$" O.D.

BAC-25 Brass Case

Dial Size: 2 1/2" Glycerin Filled
Pressure Ranges: 30" HG to 15,000 P.S.I./Bar (Dual Scale)
Accuracy: Within 1.5% of Maximum Graduation
Case: Forged Brass With Polished Brass ABS
Bourdon Tube: Copper Alloy-Up to 800 P.S.I.
Safety Coiled Copper Alloy for 800 P.S.I. and Higher
Movement: Brass With Highly Finished Bearing Surfaces
Connection: 1/4" Male NPT Brass Bottom or Rear Center Connection
(Optional Threads See Page 19c)

Safety Blow-Out Plug Included.
Restrictors Standard to Restrict Pulsations.

"BAC-25"

BAC-25 MOUNTING OPTIONS, ADD SUFFIX:
"FF" for Brass Front Flange - Example: BAC-5M-25RC-FF
"FFC" for Chrome Front Flange - Example: BAC-160-25RC-FFC
"UC" for U-Clamp - Example: BAC-3M-25RC-UC
"MID" Maximum Indicating Dial available for BAC Series see page 18c.

BAC-25 Series Brass Case, glycerin filled are designed for rugged application due to the bourdon tube being brazed to the one-piece brass case/ socket. LENZ Brass pressure gauges are known for their reliability in the field where vibrations and pulsation can occur.

STD. BOTTOM MOUNT MODEL NUMBER	REAR CENTER MOUNT MODEL NUMBER	FULL RANGE ENGLISH P.S.I.	FULL RANGE METRIC BAR	FIGURE INTERVAL P.S.I.	FIGURE INTERVAL BAR	GRADUATION INTERVAL P.S.I.	GRADUATION INTERVAL BAR
BAC-15-25	BAC-15-25RC	0-15	0-1	3	.2	.25	.02
BAC-30-25	BAC-30-25RC	0-30	0-2	5	.5	.5	.05
BAC-60-25	BAC-60-25RC	0-60	0-4	10	1	1	.1
BAC-100-25	BAC-100-25RC	0-100	0-7	20	1	2	.2
BAC-160-25	BAC-160-25RC	0-160	0-10	20	2	2	.2
BAC-200-25	BAC-200-25RC	0-200	0-14	20	2	4	.2
BAC-300-25	BAC-300-25RC	0-300	0-20	50	5	5	.5
BAC-400-25	BAC-400-25RC	0-400	0-28	50	5	5	.5
BAC-500-25	BAC-500-25RC	0-500	0-35	100	10	5	.5
*BAC-600-25	BAC-600-25RC	0-600	0-42	100	10	10	1
BAC-800-25	BAC-800-25RC	0-800	0-56	100	10	10	1
*BAC-1M-25	BAC-1M-25RC	0-1000	0-70	200	10	10	2
BAC-1500-25	BAC-1500-25RC	0-1500	0-100	300	20	25	2
*BAC-2M-25	BAC-2M-25RC	0-2000	0-140	400	20	25	2
*BAC-3M-25	BAC-3M-25RC	0-3000	0-210	500	50	50	5
*BAC-5M-25	BAC-5M-25RC	0-5000	0-350	1000	50	100	5
BAC-6M-25	BAC-6M-25RC	0-6000	0-420	1000	100	100	10
BAC-7500-25	BAC-7500-25RC	0-7500	0-510	1000	100	100	10
BAC-10M-25	—	0-10000	0-700	2000	200	200	10
BAC-15M-25	BAC-15M-25RC	0-15000	0-1000	3000	200	500	50

**S.A.E. 7/16"-20 connection in stock*

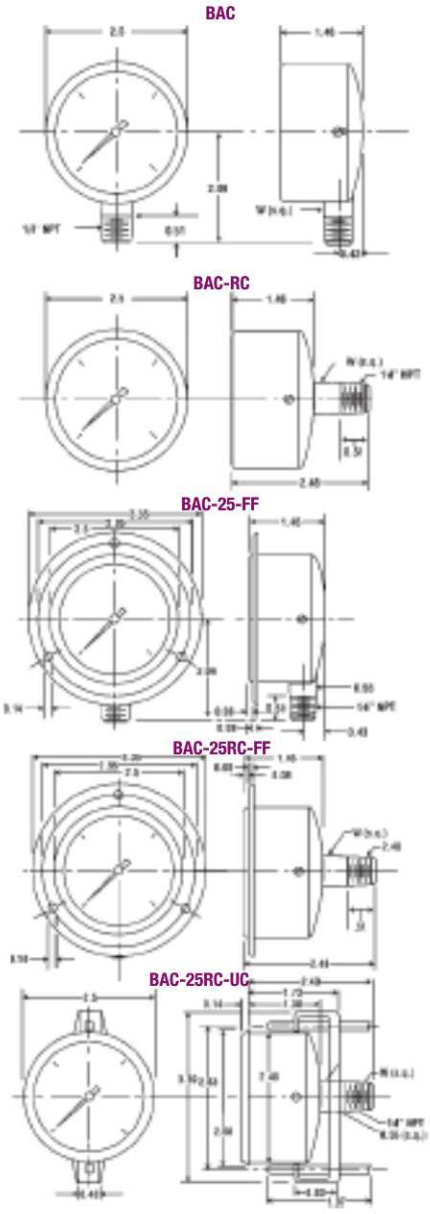

2 1/2" Glycerin-Filled Dual Scale Vacuum Gauges

STD. BOTTOM MOUNT MODEL NUMBER	REAR CENTER MOUNT MODEL NUMBER	FULL RANGE ENGLISH HG	FULL RANGE METRIC BAR	FIGURE INTERVAL HG	FIGURE INTERVAL BAR	GRADUATION INTERVAL HG	GRADUATION INTERVAL BAR
BAC-30HG-25	BAC-30HG-25RC	0-30"	0-1	5	.2	1	.02

Compound Gauges-Vacuum to Pressure

Use where pressures may vary from above atmospheric to below atmospheric.

STD. BOTTOM MOUNT MODEL NUMBER	REAR CENTER MOUNT MODEL NUMBER	FULL RANGE ENGLISH HG & P.S.I.	FULL RANGE METRIC BAR	FIGURE INTERVAL HG & P.S.I.	FIGURE INTERVAL BAR
BAC-30-15-25	BAC-30-15-25RC	30"-0-15	-1-0-1	10" & 5	.2 & .2
BAC-30-30-25	BAC-30-30-25RC	30"-0-30	-1-0-2	10" & 10	1 & 1
BAC-30-60-25	BAC-30-60-25RC	30"-0-60	-1-0-4	10" & 10	1 & 1
BAC-30-100-25	BAC-30-100-25RC	30"-0-100	-1-0-7	30" & 20	1 & 1
BAC-30-160-25	BAC-30-160-25RC	30"-0-160	-1-0-10	30" & 20	1 & 2
BAC-30-200-25	BAC-30-200-25RC	30"-0-200	-1-0-14	30" & 40	1 & 2

Phone: 937/277-9364 FAX: 937/277-6516 www.lenzinc.com

AFC-25 Stainless Steel Case

"AFC-25"

Dial Size: 2 1/2" Glycerin Filled
Pressure Ranges: 30" HG to 15,000 P.S.I./Bar (Dual Scale)
Accuracy: Within 2.0% of Maximum Graduation
Case: 304SS Stainless Steel
Bourdon Tube: Phosphor Bronze
Movement: Brass with Highly Finished Bearing Surfaces
Connection: 1/4" Male NPT Brass Bottom or Rear Center Connection
(Optional Threads See Page 19c)

Safety Blow-Out Plug Included/Restrictors Standard

AFC-25RC (REAR CENTER) MOUNTING OPTIONS, ADD SUFFIX:
"FF" for Polished Stainless Steel Front Flange - Example: AFC-5M-25RC-FF
"U-Clamp" Models, Model Number Changes to "AUB" - See Chart Below

"MID" Maximum Indicating Dial available for AFC Series see page 18c.

Lenz's AFC-25 Series Pressure Gauges feature a stainless steel case, brass stem, glycerin filled which are ideal for severe pulsation, vibration and where corrosive atmospheres are a factor. These Lenz pressure gauges are perfect for the original equipment manufacturers (O.E.M.) and other hydraulic and pneumatic equipment due to being cost effective.

STD.. BOTTOM MOUNT MODEL NUMBER	REAR CENTER MOUNT MODEL NUMBER	PANEL MOUNT U-CLAMP MODEL NUMBER	FULL RANGE ENGLISH P.S.I.	FULL RANGE METRIC BAR	FIGURE INTERVAL P.S.I.	FIGURE INTERVAL BAR	GRADUATION INTERVAL P.S.I.	GRADUATION INTERVAL BAR
AFC-15-25	AFC-15-25RC	AUB-15-25RC	0-15	0-1	3	.2	.25	.02
AFC-30-25	AFC-30-25RC	AUB-30-25RC	0-30	0-2	5	.5	.5	.5
AFC-60-25	AFC-60-25RC	AUB-60-25RC	0-60	0-4	10	1	1	.1
AFC-100-25	AFC-100-25RC	AUB-100-25RC	0-100	0-7	20	2	2	.1
AFC-160-25	AFC-160-25RC	AUB-160-25RC	0-160	0-10	20	2	2	.2
AFC-200-25	AFC-200-25RC	AUB-200-25RC	0-200	0-14	40	4	4	.4
AFC-300-25	AFC-300-25RC	AUB-300-25RC	0-300	0-20	50	5	5	.5
AFC-400-25	AFC-400-25RC	AUB-400-25RC	0-400	0-28	50	5	5	.5
AFC-500-25	AFC-500-25RC	AUB-500-25RC	0-500	0-35	100	5	10	.5
AFC-600-25	AFC-600-25RC	AUB-600-25RC	0-600	0-40	100	10	10	1
AFC-800-25	AFC-800-25RC	AUB-800-25RC	0-800	0-56	100	10	10	1
AFC-1M-25	AFC-1M-25RC	AUB-1M-25RC	0-1000	0-70	200	20	20	1
AFC-1500-25	AFC-1500-25RC	AUB-1500-25RC	0-1500	0-100	300	20	50	5
AFC-2M-25	AFC-2M-25RC	AUB-2M-25RC	0-2000	0-140	400	40	40	4
*AFC-3M-25	AFC-3M-25RC	AUB-3M-25RC	0-3000	0-210	500	50	50	5
AFC-4M-25	AFC-4M-25RC	AUB-4M-25RC	0-4000	0-300	500	50	50	5
*AFC-5M-25	AFC-5M-25RC	AUB-5M-25RC	0-5000	0-350	1000	100	100	10
*AFC-6M-25	AFC-6M-25RC	AUB-6M-25RC	0-6000	0-420	1000	100	100	10
AFC-7500-25	AFC-7500-25RC	AUB-7500-25RC	0-7500	0-420	1000	100	100	10
AFC-10M-25	AFC-10M-25RC	AUB-10M-25RC	0-10000	0-700	2000	200	200	10
AFC-15M-25	AFC-15M-25RC	AUB-15M-25RC	0-15000	0-1000	3000	200	500	50

** S.A.E. Connection Stock*

AFC-25

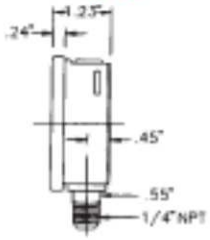

AFC-25-RC

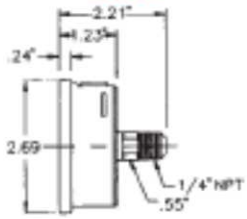

AUB-RC

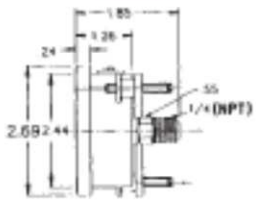

AFC-FF

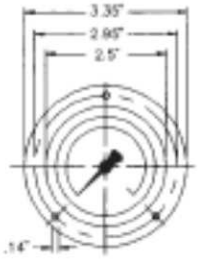

2 1/2" Stainless Case-Brass Movement Compound Gauges

STD. BOTTOM MOUNT MODEL NUMBER	REAR CENTER MOUNT MODEL NUMBER	PANEL MOUNT CLAMP REAR CENTER MOUNT MODEL NUMBER	FULL RANGE ENGLISH HG & P.S.I.	FULL RANGE METRIC BAR	FIGURE INTERVAL ENGLISH HG & P.S.I.	FIGURE INTERVAL METRIC BAR
AFC-30-30-25	AFC-30-30-25RC	AUB-30-30-25RC	30"-0-30	-1-0-2	10" & 10	1 & 1
AFC-30-60-25	AFC-30-60-25RC	AUB-30-60-25RC	30"-0-60	-1-0-4	10" & 10	1 & 1
AFC-30-100-25	AFC-30-100-25RC	AUB-30-100-25RC	30"-0-100	-1-0-7	30" & 20	1 & 1
AFC-30-200-25	AFC-30-200-25RC	AUB-30-200-25RC	30"-0-200	-1-0-14	30" & 40	1 & 2

2 1/2" Stainless Case-Brass Movement Vacuum Gauges

STD. BOTTOM MOUNT MODEL NUMBER	REAR CENTER MOUNT MODEL NUMBER	PANEL MOUNT CLAMP REAR CENTER MOUNT MODEL NUMBER	FULL RANGE ENGLISH HG	FULL RANGE METRIC BAR	FIGURE INTERVAL HG	FIGURE INTERVAL BAR	GRADUATION INTERVAL HG	GRADUATION INTERVAL BAR
AFC-30HG-25	AFC-30HG-25RC	AUB-30HG-25RC	0-30"	0-1	5	.2	1	.02

SS-25 Stainless Steel Case-Stainless Movement

"SS-25"

Dial Size: 2 1/2" Glycerin Filled
Pressure Ranges: 30" HG to 15,000 P.S.I./Bar (Dual Scale)
Accuracy: Within 2% of the first quarter of scale
1% for the next one half of scale
2% for the last quarter of scale
Case: Stainless Steel
Bourdon Tube: 316 Stainless Steel
Movement: 316 Stainless Steel with Highly Polished Bearing Surfaces
Connection: 1/4" Male NPT, 316 Stainless Steel
Safety Blow-Out Plug Included
Restrictors Standard

SS-25-RC (REAR CENTER) MOUNTING OPTIONS, ADD SUFFIX:
"FF" for Polished Stainless Steel Front Flange - Example: SS-1M-25RC-FF
"UC" for Stainless Steel U-Clamp - Example: SS-3M-25RC-UC
"MID" Maximum Indicating Dial available for SS Series see page 18c.

SS-25 Series All Stainless Steel Pressure Gauges feature a stainless steel case, 316 stainless steel bourdon tube and stem, glycerin filled for severe punishment and years of service in the field.

STD. BOTTOM MOUNT MODEL NUMBER	REAR CENTER MOUNT MODEL NUMBER	FULL RANGE ENGLISH P.S.I.	FULL RANGE METRIC BAR	FIGURE INTERVAL P.S.I.	FIGURE INTERVAL BAR	GRADUATION INTERVAL P.S.I.	GRADUATION INTERVAL BAR
SS-30-25	SS-30-25RC	0-30	0-2	5	.5	.5	.05
SS-60-25	SS-60-25RC	0-60	0-4	10	1	1	.1
SS-100-25	SS-100-25RC	0-100	0-7	20	2	2	.1
SS-160-25	SS-160-25RC	0-160	0-10	20	2	2	.2
SS-200-25	SS-200-25RC	0-200	0-14	40	4	4	.4
SS-300-25	SS-300-25RC	0-300	0-20	50	5	5	.5
SS-600-25	SS-600-25RC	0-600	0-40	100	10	10	1
SS-1M-25	SS-1M-25RC	0-1000	0-70	200	20	20	1
SS-1500-25	SS-1500-25RC	0-1500	0-100	300	20	50	5
SS-2M-25	SS-2M-25RC	0-2000	0-140	400	40	40	4
SS-3M-25	SS-3M-25RC	0-3000	0-210	500	50	50	5
SS-5M-25	SS-5M-25RC	0-5000	0-350	1000	100	100	10
SS-6M-25	SS-6M-25RC	0-6000	0-420	1000	100	100	10
SS-10M-25	SS-10M-25RC	0-10000	0-700	2000	200	200	10
SS-15M-25	SS-15M-25RC	0-15000	0-1000	3000	200	500	50

SS-25

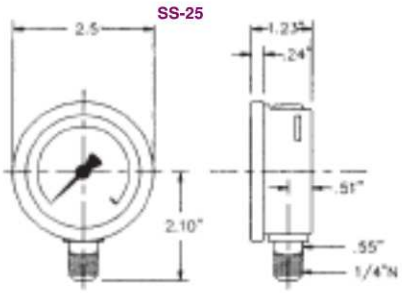

SS-25-RC

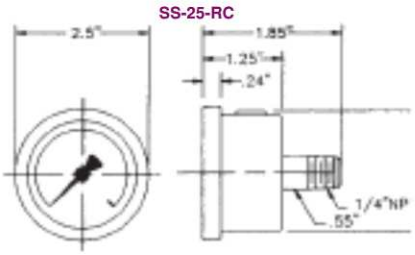

2 1/2" Stainless Steel

Compound Gauges ▪ Standard Ranges
Use where pressures may vary from above atmospheric to below atmospheric.

STD. BOTTOM MOUNT MODEL NUMBER	REAR CENTER MOUNT MODEL NUMBER	FULL RANGE ENGLISH HG & P.S.I.	FULL RANGE METRIC BAR	FIGURE INTERVAL ENGLISH HG & P.S.I.	FIGURE INTERVAL METRIC BAR
SS-30-30-25	SS-30-30-25RC	30"-0-30	-1-0-2	10" & 10	1 & 1
SS-30-60-25	SS-30-60-25RC	30"-0-60	-1-0-4	10" & 10	1 & 1
SS-30-160-25	SS-30-160-25RC	30"-0-160	-1-0-10	30" & 20	1 & 2

SS-25-RC-UC

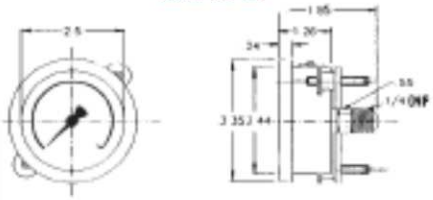

SS-25-RC-FF

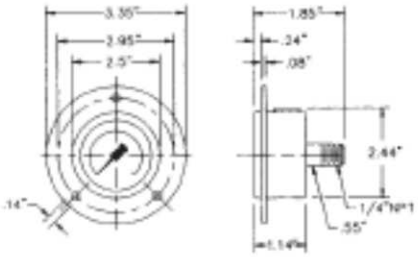

DIMENSIONS IN INCHES

Vacuum Gauges

Use where pressures may vary from above atmospheric to below atmospheric.

STD. BOTTOM MOUNT MODEL NUMBER	FULL RANGE ENGLISH HG	FULL RANGE METRIC BAR	FIGURE INTERVAL HG	FIGURE INTERVAL BAR	GRADUATION INTERVAL HG	GRADUATION INTERVAL BAR
SS-30HG-25	0-30"	0-1	5"	2	1"	.02
SS-30HG-25RC	0-30"	0-1	5	2	1	.02

Phone: 937/277-9364 FAX: 937/277-6516 www.lenzinc.com

AFC-20 Stainless Steel Case

Dial Size: 2" Glycerin Filled
Pressure Ranges: 30" HG to 5,000 P.S.I./Bar (Dual Scale)
Accuracy: Within 2.0% of Maximum Graduation
Case: Stainless Steel
Bourdon Tube: Phosphor Bronze
Movement: Brass with Highly Polished Bearing Surfaces
Connection: 1/8" Standard and (1/4" NPT, Optional)
Bottom Connection or Rear Center
Safety Blow-Out Plug Included / Restrictors Standard

AFC-20-RC MOUNTING OPTIONS, ADD SUFFIX:
"FF" for Polished Stainless Steel Front Flange
Example: AFC-160-20RC-FF

"U-Clamp" Models, Model Number Changes to "AUB"

"AFC-20RC"

"AFC-20"

AFC-20 Series Stainless Steel Pressure Gauges

Lenz introduces a new 2" dial glycerin filled pressure gauge with features that include stainless steel case and brass stem which is suitable for hydraulic equipment including pumps & compressors where high vibration exist. The glycerin fill acts as a lubricant, prevents corrosion of the movement, dampens pulsation and vibration to eliminate pointer flutter or oscillation.

BOTTOM MOUNT MODEL NUMBER	REAR CENTER MOUNT MODEL NUMBER	PANEL MOUNT U-CLAMP MODEL NUMBER	FULL RANGE METRIC INTERVAL		FIGURE INTERVAL		GRADUATION INTERVAL	
			P.S.I.	BAR	P.S.I.	BAR	P.S.I.	BAR
AFC-30HG-20	AFC-30HG-20RC	AUB-30HG-20RC	0-30"HG	0-1	5"HG	.2	1"HG	.02
AFC-15-20	AFC-15-20RC	AUB-15-20RC	0-15	0-1	3	.2	.25	.02
AFC-30-20	AFC-30-20RC	AUB-30-20RC	0-30	0-2	5	.5	.05	.05
AFC-60-20	AFC-60-20RC	AUB-60-20RC	0-60	0-4	10	1	1	.1
AFC-100-20	AFC-100-20RC	AUB-100-20RC	0-100	0-7	20	2	2	.2
AFC-160-20	AFC-160-20RC	AUB-160-20RC	0-160	0-10	20	2	2	.2
AFC-200-20	AFC-200-20RC	AUB-200-20RC	0-200	0-14	40	4	4.2	.2
AFC-300-20	AFC-300-20RC	AUB-300-20RC	0-300	0-20	50	5	5	.5
AFC-600-20	AFC-600-20RC	AUB-600-20RC	0-600	0-40	100	10	10	1
AFC-1M-20	AFC-1M-20RC	AUB-1M-20RC	0-1000	0-70	200	20	20	2
AFC-2M-20	AFC-2M-20RC	AUB-2M-20RC	0-2000	0-140	400	40	25	2
AFC-3M-20	AFC-3M-20RC	AUB-3M-20RC	0-3000	0-210	500	50	50	5
AFC-5M-20	AFC-5M-20RC	AUB-5M-20RC	0-5000	0-350	1000	100	100	5

AFC-20

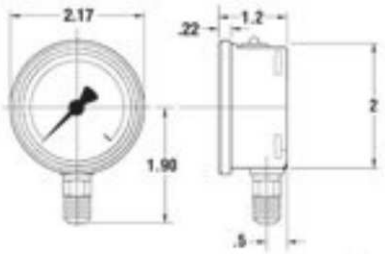

AFC-20RC

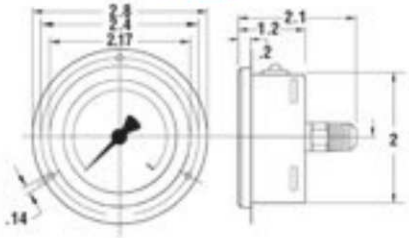

AUB-20RC

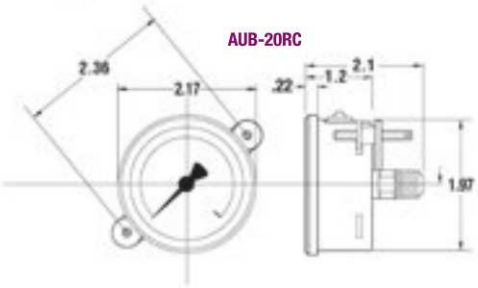

LZ-15 & LZ-20 ABS Case

Dial Size: 1 1/2" / 2" Dry Case
Pressure Ranges: 30" HG to 200 P.S.I. (Single Scale)

Accuracy: Within 2% of Maximum Graduation
Case: ABS (Acrylnitril Butadein Styrol)
Bourdon Tube: Phosphor Bronze
Movement: Brass with Highly Polished Bearing Surfaces
Connection: 1/8" Brass Bottom or Rear Center Mount
(Optional Threads See Page 19c)

LZ-20-RC MOUNTING OPTIONS, ADD SUFFIX:
"FFC" for Chrome Front Flange available only on 2"
Example: LZ-160-20RC-FF

"LZ-15 & LZ-20"

LZ-15 & LZ-20 Series ABS Case Pressure Gauges

LENZ 1 1/2" & 2" ABS Case Pressure Gauges are perfect for hydraulic and pneumatic equipment. These cost effective pressure gauges are designed where space constraints are a problem.

STD. BOTTOM MOUNT MODEL NUMBER	REAR CENTER MOUNT MODEL NUMBER	FULL RANGE ENGLISH		FIGURE METRIC INTERVAL		GRADUATION INTERVAL	
		P.S.I.	BAR	P.S.I.	BAR	P.S.I.	BAR
LZ-30HG-15	LZ-30HG-15RC	0-30"HG	0-1	5"HG	.2	1"HG	.02
LZ-15-15	LZ-15-15RC	0-15	0-1	3	.2	.25	.02
LZ-30-15	LZ-30-15RC	0-30	0-2	5	.5	.5	.05
LZ-60-15	LZ-60-15RC	0-60	0-4	10	1	1	.1
LZ-100-15	LZ-100-15RC	0-100	0-7	20	2	2	.1
LZ-160-15	LZ-160-15RC	0-160	0-10	20	2	2	.2
LZ-200-15	LZ-200-15RC	0-200	0-14	40	4	4	.4

LZ-15/LZ-15RC

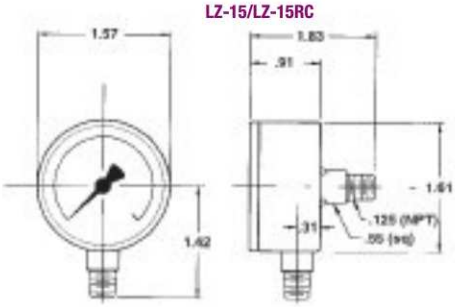

STD. BOTTOM MOUNT MODEL NUMBER	REAR CENTER MOUNT MODEL NUMBER	FULL RANGE ENGLISH		FIGURE METRIC INTERVAL		GRADUATION INTERVAL	
		P.S.I.	BAR	P.S.I.	BAR	P.S.I.	BAR
LZ-30HG-20	LZ-30HG-20RC	0-30"HG	0-1	5"HG	.2	1"HG	.02
LZ-15-20	LZ-15-20RC	0-15	0-1	3	.2	.25	.02
LZ-30-20	LZ-30-20RC	0-30	0-2	5	.5	.5	.05
LZ-60-20	LZ-60-20RC	0-60	0-4	10	1	1	.1
LZ-100-20	LZ-100-20RC	0-100	0-7	20	2	2	.1
LZ-160-20	LZ-160-20RC	0-160	0-10	20	2	2	.2
LZ-200-20	LZ-200-20RC	0-200	0-14	40	4	4	.4

LZ-20/LZ-20RC

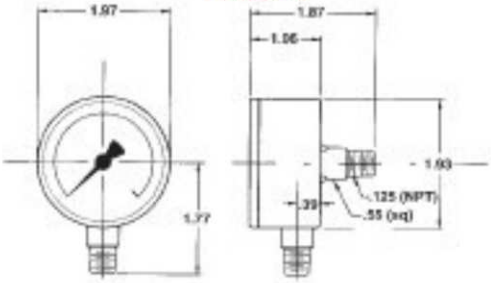

LZ-20RC-FF

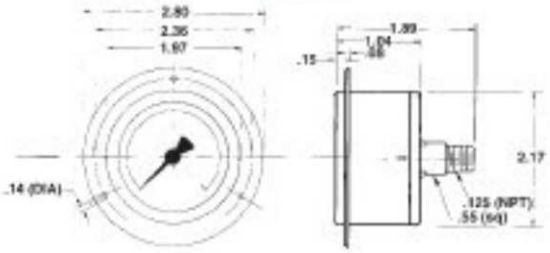

Phone: 937/277-9364 FAX: 937/277-6516 www.lenzinc.com

LZ-25 Steel Case

Dial Size: 2 1/2" Dry Case
Pressure Ranges: 30" HG to 6,000 P.S.I./Bar (Dual Scale)
Accuracy: Within 2.0% of Maximum Graduation
Case: Black Steel
Bourdon Tube: Phosphor Bronze
Movement: Brass
Connection: 1/4" Male NPT Brass Bottom or Rear Center Connection
(Optional Threads See Page 19c)
Restrictors Standard:

LZ-25/ LZ-25-RC MOUNTING OPTIONS, ADD SUFFIX:
"FF" for Chrome Front Flange - Example: LZ-160-25RC-FF
"UC" for Panel Mount option - Example: LU-160-25RC
Glass Lens Available.
"MID" Maximum Indicating Dial available for LZ Series see page 18c.

"LZ-25"

LZ-25 Series Steel Case Pressure Gauges
LENZ 2 1/2" Steel Case Pressure Gauges are perfect for hydraulic and pneumatic equipment. These cost effective pressure gauges are designed where space constraints are a problem.

STD. BOTTOM MOUNT MODEL NUMBER	REAR CENTER MOUNT MODEL NUMBER	PANEL MOUNT U-CLAMP REAR CENTER MOUNT MODEL NUMBER	FULL RANGE ENGLISH P.S.I.	FULL RANGE METRIC BAR	FIGURE INTERVAL P.S.I.	FIGURE INTERVAL BAR	GRADUATION INTERVAL P.S.I.	GRADUATION INTERVAL BAR
LZ-15-25	LZ-15-25RC	LU-15-25RC	0-15	0-1	3	.2	.25	.02
LZ-30-25	LZ-30-25RC	LU-30-25RC	0-30	0-2	5	.5	.5	.05
LZ-60-25	LZ-60-25RC	LU-60-25RC	0-60	0-4	10	1	1	.1
LZ-100-25	LZ-100-25RC	LU-100-25RC	0-100	0-7	20	2	2	.1
LZ-160-25	LZ-160-25RC	LU-160-25RC	0-160	0-10	20	2	2	.2
LZ-200-25	LZ-200-25RC	LU-200-25RC	0-200	0-14	40	4	4	.4
LZ-300-25	LZ-300-25RC	LU-300-25R	0-300	0-20	50	5	5	.5
LZ-400-25	LZ-400-25RC	LU-400-25RC	0-400	0-28	50	5	5	.5
LZ-600-25	LZ-600-25RC	LU-600-25RC	0-600	0-42	100	10	10	1
LZ-1M-25	LZ-1M-25RC	LU-1M-25RC	0-1000	0-70	100	20	20	1
LZ-1500-25	LZ-1500-25RC	LU-1500-25RC	0-1500	0-100	300	20	50	5
LZ-2M-25	LZ-2M-25RC	LU-2M-25RC	0-2000	0-140	400	40	40	4
LZ-3M-25	LZ-3M-25RC	LU-3M-25RC	0-3000	0-210	600	50	50	5
LZ-5M-25	LZ-5M-25RC	LU-5M-25RC	0-5000	0-350	1000	100	100	10
LZ-6M-25	LZ-6M-25RC	LU-6M-25RC	0-6000	0-420	1000	100	100	10

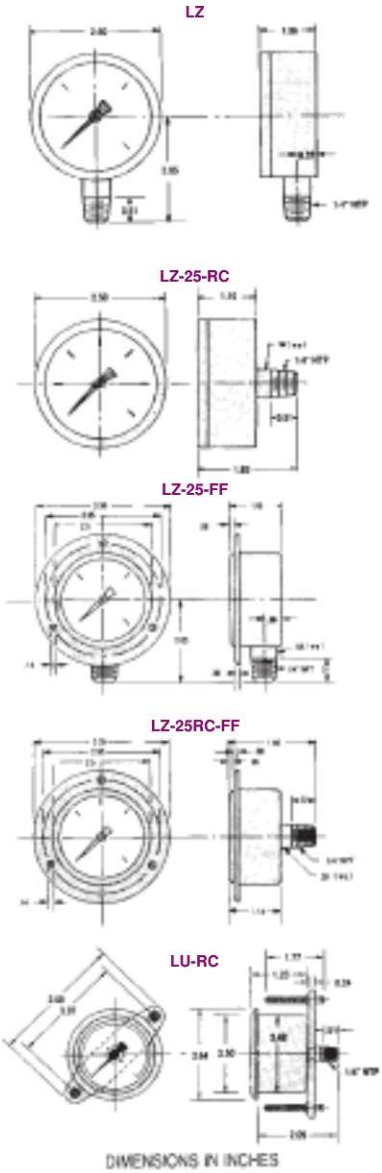

Vacuum Gauges

STD. BOTTOM MOUNT MODEL NUMBER	REAR CENTER MOUNT MODEL NUMBER	FULL RANGE ENGLISH HG	FULL RANGE METRIC BAR	FIGURE INTERVAL HG	FIGURE INTERVAL BAR	GRADUATION INTERVAL HG	GRADUATION INTERVAL BAR
LZ-30HG-25	LZ-30HG-25RC	0-30"	0-1	5	.2	1	.02

Compound Gauges

Use where pressures may vary from above atmospheric to below atmospheric.

STD. BOTTOM MOUNT MODEL NUMBER	REAR CENTER MOUNT MODEL NUMBER	FULL RANGE ENGLISH HG	FULL RANGE METRIC BAR	FIGURE INTERVAL HG	FIGURE INTERVAL BAR
LZ-30-15-25	LZ-30-15-25RC	30"-0-15	-1-0-1	10" & 5	.2 & .2
LZ-30-30-25	LZ-30-30-25RC	30"-0-30	-1-0-2	10" & 10	1 & 1
LZ-30-60-25	LZ-30-60-25RC	30"-0-60	-1-0-4	10" & 10	1 & 1
LZ-30-100-25	LZ-30-100-25RC	30"-0-100	-1-0-7	30" & 20	1 & 1
LZ-30-160-25	LZ-30-160-25RC	30"-0-160	-1-0-10	30" & 20	1 & 2
LZ-30-200-25	LZ-30-200-25RC	30"-0-200	-1-0-14	30" & 40	1 & 2

BAC-4 Brass Case

Dial Size: 4" Glycerin Filled
Pressure Ranges: 30" HG to 15,000 P.S.I./Bar (Dual Scale)
Accuracy: Within 1.5% of Maximum Graduation
Case: Forged Brass Chrome Plated
Bourdon Tube: Copper Alloy - Up to 1500 P.S.I.
Safety Coiled Alloy Steel for 1500 P.S.I. and Higher
Movement: Brass With Highly Finished Bearing Surfaces
Connection: 1/2" Male NPT Brass Bottom or rear lower connection
(Optional 1/4" Available)

(Optional Threads See Page 19c)

Safety Blow-Out Plug Included.
Restrictors Standard to Restrict Pulsations.

"BAC-4"

BAC-4/ BAC-4-RL MOUNTING OPTIONS, ADD SUFFIX:
"FF" for Chrome Front Flange - Example: BAC-5M-4RL-FF
"UC" for U-Clamp - Example: BAC-3M-4RL-UC
"RF" for Chrome Rear Flange - Example: BAC-1500-4RF
"MID" Maximum Indicating Dial available for BAC Series see page 18c.

BAC-4 Series Brass Case Pressure Gauges
LENZ all brass cases are designed for the most rugged applications due to the bourdon tube being brazed to the one-piece brass case/socket and are known for their reliability in the field where vibration and pulsation can occur.

STD. BOTTOM MOUNT MODEL NUMBER	REAR LOWER MOUNT MODEL NUMBER	FULL RANGE ENGLISH P.S.I.	FULL RANGE METRIC BAR	FIGURE INTERVAL P.S.I.	FIGURE INTERVAL BAR	GRADUATION INTERVAL P.S.I.	GRADUATION INTERVAL BAR
BAC-30HG-4	BAC-30HG-4RL	0-30"HG	0-1	5"HG	.1	5"HG	.01
BAC-15-4	BAC-15-4RL	0-15	0-1	3	.1	.2	.01
BAC-30-4	BAC-30-4RL	0-30	0-2	5	.2	.5	.02
BAC-60-4	BAC-60-4RL	0-60	0-4	10	.5	1	.05
BAC-100-4	BAC-100-4RL	0-100	0-7	10	1	1	.1
BAC-160-4	BAC-160-4RL	0-160	0-10	20	1	2	.1
BAC-200-4	BAC-200-4RL	0-200	0-14	20	2	2	.2
BAC-300-4	BAC-300-4RL	0-300	0-20	50	2	5	.2
BAC-400-4	BAC-400-4RL	0-400	0-28	50	5	5	.2
BAC-600-4	BAC-600-4RL	0-600	0-42	100	5	10	.5
BAC-800-4	BAC-800-4RL	0-800	0-56	100	5	10	.5
BAC-1M-4	BAC-1M-4RL	0-1000	0-70	100	10	10	1
BAC-1500-4	BAC-1500-4RL	0-1500	0-100	300	10	20	1
BAC-2M-4	BAC-2M-4RL	0-2000	0-140	200	20	20	2
BAC-3M-4	BAC-3M-4RL	0-3000	0-210	500	20	50	2
BAC-5M-4	BAC-5M-4RL	0-5000	0-350	500	50	50	5
BAC-10M-4	BAC-10M-4RL	0-10000	0-700	1000	100	100	10
BAC-15M-4	BAC-15M-4RL	0-15000	0-1000	3000	100	200	10

BAC-4

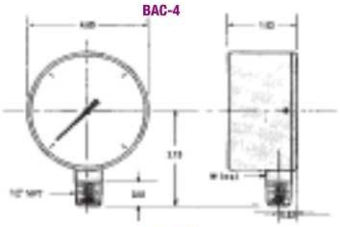

BAC-4-RL

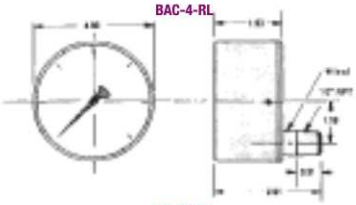

BAC-4-FF

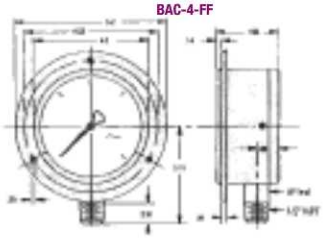

BAC-4RL-FF

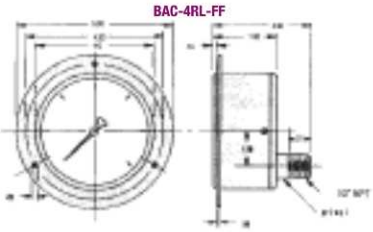

BAC-4RL-UC

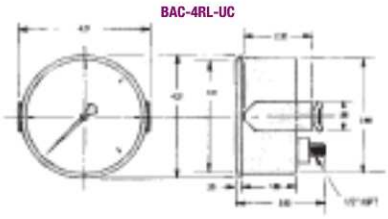

Phone: 937/277-9364 FAX: 937/277-6516 www.lenzinc.com

AFC-4 Stainless Steel Case

Dial Size: 4" Glycerin Filled
Pressure Ranges: 30" HG to 15,000 P.S.I./Bar (Dual Scale)
Accuracy: Within 2.0% of Maximum Graduation
Case: Polished Stainless Steel Ring
Bourdon Tube: Copper Alloy - Up to 1500 P.S.I.
Safety Coiled Alloy Steel for 1500 P.S.I. and Higher
Movement: Brass With Highly Finished Bearing Surfaces
Connection: 1/4" Male NPT Brass Bottom or Rear Lower Connection
(Optional Threads See Page 19c)
Safety Blow-Out Plug Included
Restrictors Standard to Restrict Pulsations.

"AFC-4"

AFC-4-RL MOUNTING OPTIONS, ADD SUFFIX:
"FF" for Polished Stainless Steel Front Flange - Example: AFC-5M-4RL-FF
"UC" for U-Clamp - Example: AFC-3M-4RL-UC
"RF" for Polished Stainless Steel Rear Flange

AFC Series 4" Pressure Gauges
LENZ gauges have a 4" stainless steel case, are glycerin filled, with brass connection and are best suited for pumps, compressors, and hydraulic equipment where high vibration exists. The stainless steel case offers protection from corrosive environments as are found, for example, at chemical plants and petrochemical plants. The glycerin fill acts as a permanent lubricant, prevents corrosion of the movement, dampens pulsation and vibration to eliminate pointer flutter or oscillation.

STD. BOTTOM MOUNT MODEL NUMBER	REAR LOWER MOUNT MODEL NUMBER	FULL RANGE ENGLISH P.S.I.	FULL RANGE METRIC BAR	FIGURE INTERVAL P.S.I.	FIGURE INTERVAL BAR	GRADUATION INTERVAL P.S.I.	GRADUATION INTERVAL BAR
AFC-30HG-4	AFC-30HG-4RL	0-30" HG	0-1	5"HG	.1	.5"HG	.01
AFC-15-4	AFC-15-4RL	0-15	0-1	3	.1	.2	.01
AFC-30-4	AFC-30-4RL	0-30	0-2	5	.2	.5	.02
AFC-60-4	AFC-60-4RL	0-60	0-4	10	.5	1	.05
AFC-100-4	AFC-100-4RL	0-100	0-7	10	1	1	.1
AFC-160-4	AFC-160-4RL	0-160	0-10	20	1	2	.1
AFC-200-4	AFC-200-4RL	0-200	0-14	20	2	2	.2
AFC-300-4	AFC-300-4RL	0-300	0-20	50	2	5	.2
AFC-400-4	—	0-400	0-28	50	5	5	.2
AFC-600-4	AFC-600-4RL	0-600	0-42	100	5	10	.5
AFC-800-4	AFC-800-4RL	0-800	0-56	100	5	10	.5
AFC-1M-4	AFC-1M-4RL	0-1000	0-70	100	10	10	1
AFC-1500-4	—	0-1500	0-100	300	10	20	1
AFC-2M-4	AFC-2M-4RL	0-2000	0-140	200	20	20	2
AFC-3M-4	AFC-3M-4RL	0-3000	0-210	500	20	50	2
AFC-5M-4	AFC-5M-4RL	0-5000	0-350	500	50	50	5
AFC-6M-4	AFC-6M-4RL	0-6000	0-350	1000	50	100	5
AFC-10M-4	—	0-10000	0-700	1000	100	100	10
AFC-15M-4	—	0-15000	0-1000	3000	100	200	10

AFC-4
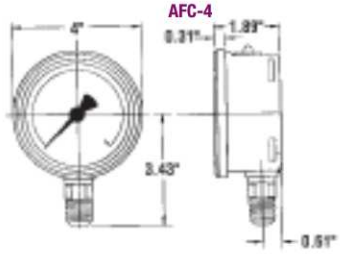

AFC-4-RL
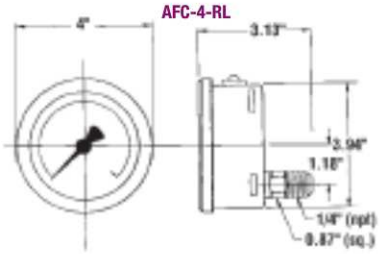

AFC-4-RL-FF
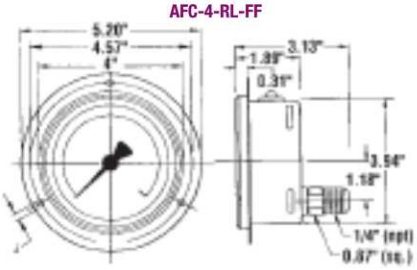

AFC-4-RL-UC
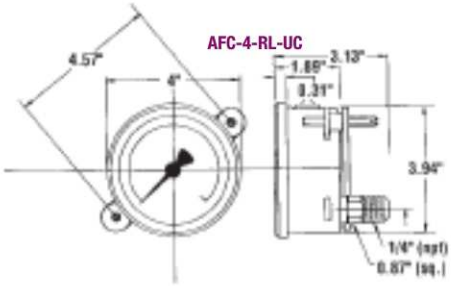

SS-4 Stainless Steel Case-Stainless Movement

Dial Size: 4" Glycerin Filled
Pressure Ranges: 30" HG to 15,000 P.S.I./Bar (Dual Scale)
Accuracy: Within 1.0% of Maximum Graduation
Case: 304SS Stainless Steel
Bourdon Tube: 316 Stainless Steel
Movement: 316 Stainless Steel with Highly Polished Bearing Surfaces
Connection: 1/2" Male NPT, 316 Stainless Steel
Safety Blow-Out Plug Included.
Restrictors Standard.

SS-4-RL MOUNTING OPTIONS, ADD SUFFIX:
"FF" for Polished Stainless Steel Front Flange - Example: SS-10M-4RL-FF
"UC" for Stainless Steel U-Clamp - Example: SS-3M-4RL-UC
"RF" for Stainless Steel Rear Flange - Example: SS-1M-4RF

"SS-4"

SS-4 Series All Stainless Steel Pressure Gauges feature a stainless steel case, 316 stainless steel bourdon tube and stem, glycerin filled for severe punishment and years of service in the field. LENZ SS-4 series are highly accurate within 1% of full scale.

STD. BOTTOM MOUNT MODEL NUMBER	REAR LOWER MOUNT MODEL NUMBER	FULL RANGE ENGLISH P.S.I.	FULL RANGE METRIC BAR	FIGURE INTERVAL P.S.I.	FIGURE INTERVAL BAR	GRADUATION INTERVAL P.S.I.	GRADUATION INTERVAL BAR
SS-30HG-4	SS-30HG-4RL	0-30" HG	0-1	5" HG	.1	.5 "HG	.01
SS-30-4	SS-30-4RL	0-30	0-2	5	.2	.5	.02
SS-60-4	SS-60-4RL	0-60	0-4	10	.5	1	.05
SS-100-4	SS-100-4RL	0-100	0-7	10	1	1	.1
SS-160-4	SS-160-4RL	0-160	0-10	20	1	2	.1
SS-300-4	SS-300-4RL	0-300	0-20	50	2	5	.2
SS-600-4	SS-600-4RL	0-600	0-42	100	5	10	.5
SS-1M-4	SS-1M-4RL	0-1000	0-70	100	10	10	1
SS-2M-4	SS-2M-4RL	0-2000	0-140	200	20	20	2
SS-3M-4	SS-3M-4RL	0-3000	0-210	500	20	50	2
SS-5M-4	SS-5M-4RL	0-5000	0-350	500	50	50	5
SS-6M-4	SS-6M-4RL	0-6000	0-420	1000	50	100	5
SS-10M-4	SS-10M-4RL	0-10000	0-700	1000	100	100	10
SS-15M-4	SS-15M-4RL	0-15000	0-1050	3000	100	200	10

SS-4

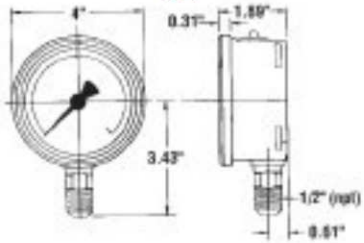

SS-4-RL

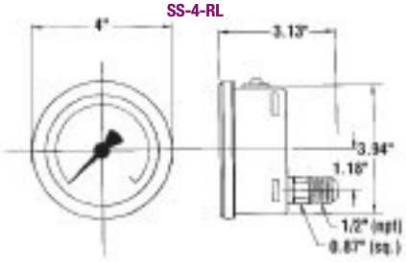

SS-4RL-FF

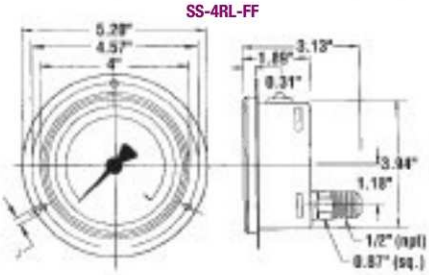

SS-4-RL-UC

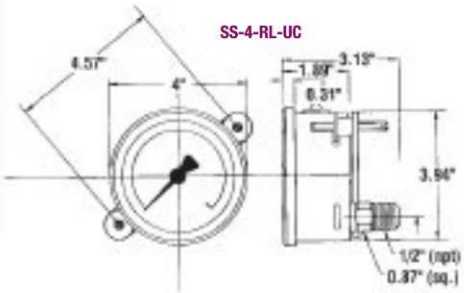

Phone: 937/277-9364 FAX: 937/277-6516 www.lenzinc.com

PRO-45 Process ABS Case-Stainless Movement

Dial Size: 4 1/2" Glycerin Filled
Pressure Ranges: 30" HG to 30,000 P.S.I. (Single Scale)
Accuracy: Within +/- 0.5% of Maximum Graduation
Case: Fiberglass reinforced thermoplastic, black
Bourdon Tube: Type 316 Stainless Steel
Movement: Type 316 Stainless Steel
Connection: 1/2" Male NPT, Type 316 Stainless Steel
Safety Blow-Out Back Case
Restrictors Standard

"PRO-45"

PRO-45 Series Process Gauges have been designed and manufactured to the highest standards for the chemical & petroleum industries to withstand vibration, corrosive media and environments, and a wide range of temperatures.

STD. BOTTOM MOUNT MODEL NUMBER	FULL RANGE ENGLISH P.S.I.	FIGURE INTERVAL P.S.I.	GRADUATION INTERVAL P.S.I.
PRO-30HG-45	0-30"HG	5"HG	1"HG
PRO-30-45	0-30	5	.5
PRO-60-45	0-60	10	1
PRO-100-45	0-100	10	1
PRO-160-45	0-160	20	2
PRO-300-45	0-300	50	5
PRO-600-45	0-600	100	10
PRO-1M-45	0-1000	100	10
PRO-2M-45	0-2000	200	20
PRO-3M-45	0-3000	500	20
PRO-5M-45	0-5000	1000	50
PRO-6M-45	0-6000	1000	50
PRO-10M-45	0-10000	1000	50
PRO-15M-45	0-15000	2000	100
PRO-20M-45	0-20000	2000	100
PRO-30M-45	0-30000	2000	100

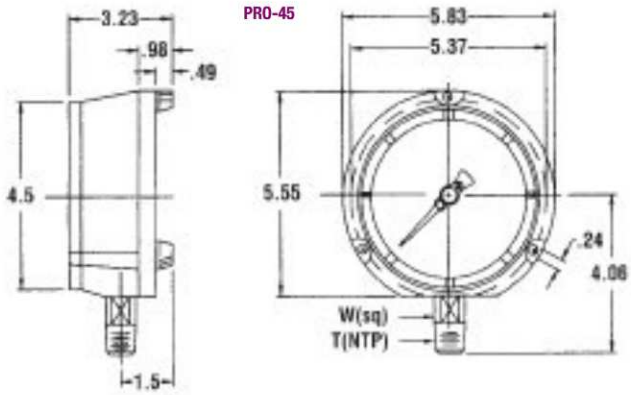

AMM-25 Refrigeration Ammonia Pressure Gauges

Dial Size: 2 1/2" (Dry Case)
Ranges: 30" to 300 P.S.I./F (Dual Scale)
Accuracy: Within 1.5% of Maximum Graduation
Case: Stainless Steel
Movement: 316 Stainless Steel
Connection: 1/4" 316 Stainless Steel

LENZ Refrigeration Ammonia Gauges are suitable for refrigeration Ammonia and other liquid or gaseous media which are compatible with 316 stainless steel & will not contaminate the pressure system.

STANDARD BOTTOM MOUNT MODEL NUMBER	P.S.I./F
AMM-30-150-25	30"-150 P.S.I./84 F
AMM-30-300-25	30"-300 P.S.I./126 F

"AMM-25"

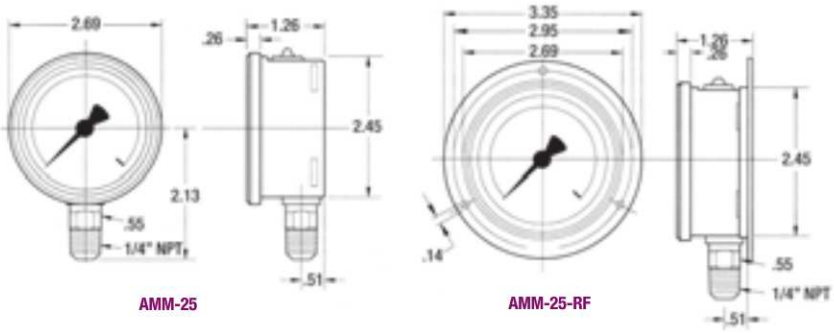

LOW-25 Black Steel Case-Capsule Movement

Inches/Water Column
Dial Size: 2 1/2" Dry Case
Pressure Ranges: 15"H20 to 240"H20/3 to 10 P.S.I.
Accuracy: Within 1.5% of Maximum Graduation
Case: Black Steel
Movement: Copper Alloy Capsule designed to measure low pressure
Connection: 1/4" Brass Bottom Mount or Rear Connection
Recalibration: Adjustment Screw on dial to re-zero pointer if necessary

LOW-25 MOUNTING OPTIONS, ADD SUFFIX:
"FF" for Chrome Front Front Flange - Example: LOW-30H20-25RC-FF
LOW-25
LENZ Low pressure gauges are extremely sensitive and highly accurate. The copper alloy capsule is designed to measure pressure and vacuum of gaseous media from as low as 15"H20 to 240"H20/3 to 10 P.S.I.

"LOW-25"

Pressure Ranges (dual scale) (H20/mm H20)

STANDARD BOTTOM MOUNT MODEL NUMBER	REAR CENTER MOUNT MODEL NUMBER	Inches/H20	mm/H20
LOW-15H20-25	LOW-15H20-25RC	0-15	0-380
LOW-30H20-25	LOW-30H20-25RC	0-30	0-760
LOW-60H20-25	LOW-60H20-25RC	0-60	0-1500
LOW-100H20-25	LOW-100H20-25RC	0-100	0-2500
LOW-200H20-25	LOW-200H20-25RC	0-200	0-5000

LOW-25

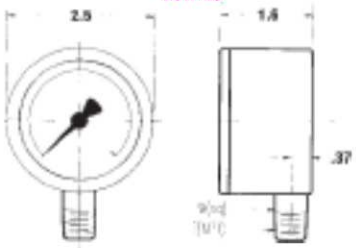

(oz./sq.in./ H20)

STANDARD BOTTOM MOUNT MODEL NUMBER	REAR CENTER MOUNT MODEL NUMBER	Ounces	Inches/H20
LOW-20OZ-25	LOW-20OZ-25RC	0-20	0-34
LOW-32OZ-25	LOW-32OZ-25RC	0-32	0-55

LOW-25RC

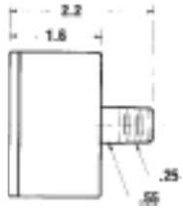

(oz./sq.in./ mmH20)

STANDARD BOTTOM MOUNT MODEL NUMBER	REAR CENTER MOUNT MODEL NUMBER	Ounces	mm/H20
LOW-200OZ-25	LOW-200ZMM-25RC	0-15	0-880
LOW-300OZ-25	LOW-300ZMM-25RC	0-30	0-1320
LOW-600OZ-25	LOW-600ZMM-25RC	0-60	0-2640

LOW-25RC-FF

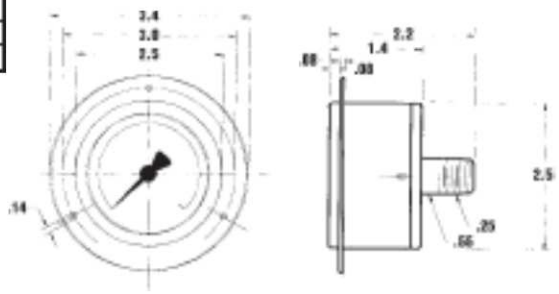

Pressure Ranges (Single Scale)

STANDARD BOTTOM MOUNT MODEL NUMBER	REAR CENTER MOUNT MODEL NUMBER	P.S.I.
LOW-03-25	LOW-03-25RC	0-3
LOW-05-25	LOW-05-25RC	0-5
LOW-10-25	LOW-10-25RC	0-10

Phone: 937/277-9364 FAX: 937/277-6516 www.lenzinc.com

Bimetal Thermometer

Model No. BMT
Case & Stem: 304 Stainless Steel
Window: Instrument Glass (Acrylic Optional)
Connections are all 1/2" NPT
External Zero Adjustment
Dial Sizes Available: 3" or 5"
Optional: Temperature Ratings up to 750° Fahrenheit
Optional: Silicone Liquid Filling. Standard Stem Lengths up to 24" and custom lengths up to 72".
Stem lengths are measured from the underneath side of the hex.

Lenz will build to your specifications!

Lenz's Bimetal Thermometers were developed to fill a need for a thermometer performing accurately under rough and difficult applications. This is accomplished by utilizing the Law of Coefficient of Expansion differential of two unlike materials; hence the name "Bimetal Thermometer." The expansion differential of the two unlike metals, connected with a mechanical linkage which Lenz coats with a viscous silicone to minimize pointer oscillation, shows the temperature on the hermetically sealed dial. The Lenz BMT series thermometer probe extends well into the fluid to provide a more accurate reading of fluid temperatures than surface thermometers and are unaffected by ambient temperature.

MODEL NUMBER	DIAL SIZE	TEMPERATURE	STEM LENGTH	STEM CONNECTION
BMT-3-250-25-RC	3"	0-250 F° / -20-120 C°	2 1/2"	Rear Connection
BMT-3-250-4-RC	3"	0-250 F° / -20-120 C°	4"	
BMT-3-250-6-RC	3"	0-250 F° / -20-120 C°	6"	
BMT-3-550-25-RC	3"	50-550 F° / 10-290 C°	2 1/2"	Rear Connection
BMT-3-550-4-RC	3"	50-550 F° / 10-290 C°	4"	
BMT-3-550-6-RC	3"	50-550 F° / 10-290 C°	6"	
BMT-3-250-25-LM	3"	0-250 F° / -20-120 C°	2 1/2"	Lower Mount
BMT-3-250-4-LM	3"	0-250 F° / -20-120 C°	4"	
BMT-3-250-6-LM	3"	0-250 F° / -20-120 C°	6"	
BMT-3-550-25-LM	3"	50-550 F° / 10-290 C°	2 1/2"	Lower Mount
BMT-3-550-4-LM	3"	50-550 F° / 10-290 C°	4"	
BMT-3-550-6-LM	3"	50-550 F° / 10-290 C°	6"	
BMT-3-250-25-AA	3"	0-250 F° / -20-120 C°	2 1/2"	All Angle
BMT-3-250-4-AA	3"	0-250 F° / -20-120 C°	4"	
BMT-3-250-6-AA	3"	0-250 F° / -20-120 C°	6"	
BMT-3-550-25-AA	3"	50-550 F° / 10-290 C°	2 1/2"	All Angle
BMT-3-550-4-AA	3"	50-550 F° / 10-290 C°	4"	
BMT-3-550-6-AA	3"	50-550 F° / 10-290 C°	6"	
BMT-5-550-25-AA	5"	50-550 F° / 10-290 C°	2 1/2"	All Angle
BMT-5-550-4-AA	5"	50-550 F° / 10-290 C°	4"	
BMT-5-550-6-AA	5"	50-550 F° / 10-290 C°	6"	

BMT-RC

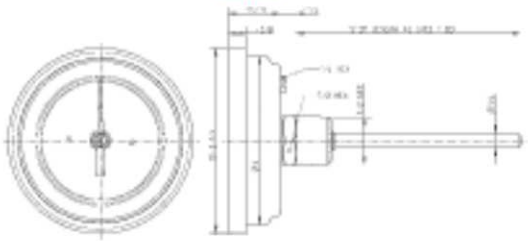

BMT-LM

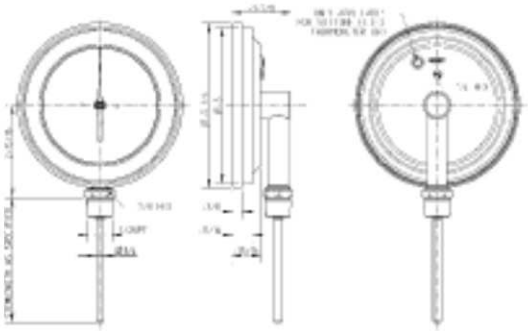

BMT-AA

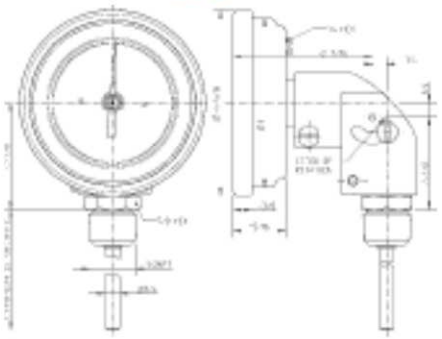

Thermowells permit the removal, replacement or testing of the Bimetal Thermometer without affecting the process media or the system.

Model	Description
TW-25	Thermowell: For 2 1/2" Probe Lengths
TW-4	Thermowell: For 4" Probe Lengths
TW-6	Thermowell: For 6" Probe Lengths

Transmitters

Model No. LZAT

Specifications

- Protected against reverse polarity, short circuit, and over voltage
- 1/4" NPT, 7/16-20 UNF (S.A.E.) ,1/2" NPT connections
- Stainless steel case (316) and (316L) wetted parts
- 18 standard ranges available (0-10,000 P.S.I.)
- Accuracy .5% (B.F.S.L.) of span (Standard)*
- Non Repeatability < 0.1 % of span
- Hysteresis < 0.16 % of span
- Supply voltage 10-30vdc (14-30 for 0-10vdc output signal)
- Operating temperature 32-180F (0-80 C)
- Response time <4 MS

Options

- 4-20 ma, 0-10v, 0-5V
- Electrical connection DIN 175301-803
- Flying leads

How it works

LENZ LZAT pressure trasmitters are now available using a flexible modular assembly systems. All components from the process connection, pressure range, electrical connection and cable length are modular. You can now select the range or connection that meets your needs.

Your selection will generate the Lenz model number. Order this model code and we build your pressure transducer.

AG, AK with Cable

DL

CG, CK with Cable

Ordering Code

LZAT - 6 - P - 3M - 4N - A - C - AG - 6

SERIES
LZAT

NON LINEARITY
3 < .25% BFSL
6 < .5% BFSL Standard

PRESSURE UNIT
P P.S.I.
A Absolute
V Compound

PRESSURE RANGE
15 0-15 P.S.I. (A)
25 0-25 P.S.I. (A)
30 0-30 P.S.I. (A)
50 0-50 P.S.I. (A)
100 0-100 P.S.I. (A)
160 0-160 P.S.I.
-30HG-160 P.S.I. (V)
200 0-200 P.S.I. (A)
-30HG-200 P.S.I. (V)
300 0-300 P.S.I. (A)
-30HG- 300 P.S.I. (V)
500 0-500 P.S.I.
1M 0-1000 P.S.I.
1500 0-1500 P.S.I.
2M 0-2000 P.S.I.
3M 0-3000 P.S.I.
5M 0-5000 P.S.I.
10M 0-10,000 P.S.I.

SIGNAL OUTPUT
A 4-20 Ma, 2-wire
F 0-10V, 3-wire
G 0-5V, 3-wire
K 1-5V, 3-wire
W .5-4.5V, 3-wire

PROCESS CONNECTION
4N 1/4" NPT
4NF 1/4" FNPT
4A 7/16-20 MS.A.E.
8N 1/2" MNPT

POWER SUPPLY
A 8-30 VDC (output signals A, G, K)
C 14-30 VDC (only output signals F)
E 5VDC +/-10% (only with output signal W)

ELECTRICAL CONNECTION
AG Valve connector size A
AK Valve connector size A w/cable
CG valve connector size C
CK Valve connector size C w/cable
M4 Circular connector M12x1. 4pin
MG Angled connector M12x1 4pin, w/cable
MI Straight connector M12x1,4 pin, w/cable
DL Cable with free ends (IP67)

CABLE LENGTH
N no cable
6 6 feet (only AK, CK, MG, MI, or DL)
15 15 feet (only AK, CK, MG, or MI)

1) We recommend 18-22 AWG wire.
2) LZAT can't be used with chemical seal.

Dimensions in inches (mm)

Ingress protection IP per IEC 60529. The ingress protection classes specified only apply while the pressure transmitter is connected with female connectors that provide the equivalent ingress protection.

DIN 175301-803 A
L-connector
conductor outer diameter
.24" to .32"
IP 65

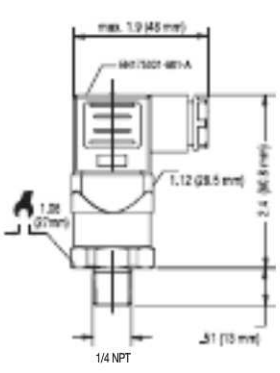

DIN 175301-803 C
L-connector
conductor outer diameter
.18" to .24"
IP 65

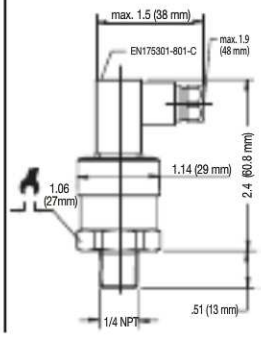

M 12x1, 4-pin
IP 67

Flying leads,
conductor cross section
.013 in ^{2},
conductor outer diameter
.26",
PUR cable - unshielded,
IP 67

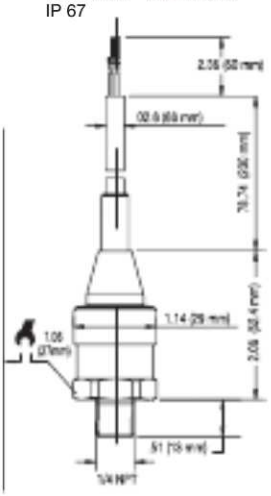

Pressure connections

1/4 NPT

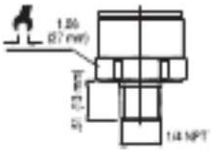

1/2 NPT Male

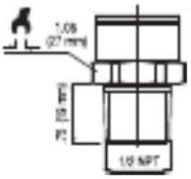

7/16 - 20 UNF
O-ring boss

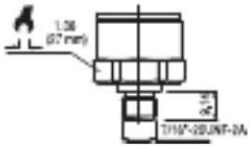

Electrical connections

	2-wire	3-wire
DIN 175301-803 A L-connector	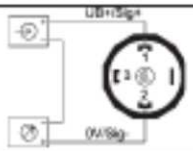	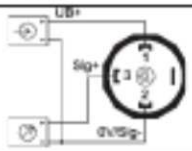
DIN 175301-803 C L-connector	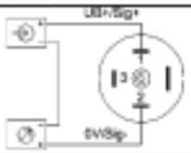	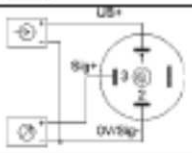
M 12x1, 4-pin without angle socket or female cable connectors	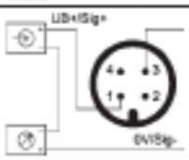	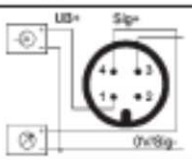
Flying leads 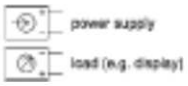	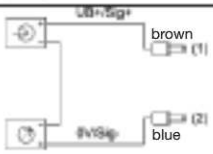	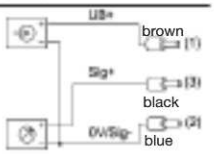

Specifications and dimensions given in this datasheet represent the state of engineering at the time of printing.
Modifications may take place and materials specified may be replaced by others without prior notice.

Digital Gauge

Model No. LDPG-30

Specifications
- Pressure ranges: from 0 … 30 psi up to 0 … 10,000 psi
- Display accuracy: < + 0.25% B.F.S.L.
- Pressure connections: 1/4 NPT male, 1/2 NPT male
- Case: Stainless steel, 3.15“ (80 mm) diameter
- Power supply: 2x 1.5 V Type AA cell
- CE Approval

Durable, Precise Local Display

A digital display is ideal for precise and fast pressure readings. The LDPG-30 features a durable stainless steel housing and integral battery power supply making it suitable for a wide range of applications and industries.

The multi-function display features a bar graph with a drag pointer function and a MIN/MAX memory. The MIN/MAX memory feature permits later recall of the minimum and maximum pressure readings.

Standard and Enhanced Versions

The LDPG-30 is available in two versions: standard (LDPG-30-S) and enhanced (LDPG-30-E). Both versions allow the user to easily switch between the most widely-accepted international measurement units including bar, psi and MPa.

Additional features of the enhanced version include a backlit display for use in low light conditions and a housing that can be rotated for optimal viewing. Additional user-programmable functions of the LDPG-30-E include auto power-off, tare function, and password protection.

Proven Pressure Measurement Technology

Sensors manufactured by LENZ provide high accuracy, longterm stability and excellent repeatability. For optimal performance, pressure ranges up to 600 PSI (50 bar) use the LENZ ceramic sensor. Pressure ranges of 1450 PSI (100 bar) and higher utilize LENZ thin film sensor technology.

LDPG-30-S
Standard Version

LDPG-30-E
Enhanced Version

Accessories

Protective boot (black, vulcanized rubber) Standard on LDPG-30-E

Description of the Display

LDPG-30-E

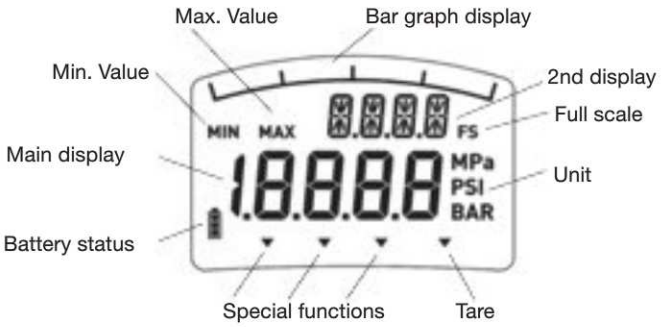

LDPG-30-S

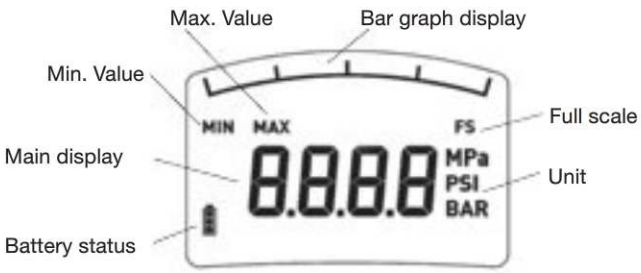

Specifications and dimensions given in this data sheet represent the state of engineering at the time of printing.
Modifications may take place and materials specified may be replaced by others without prior notice.

Phone: 937/277-9364 FAX: 937/277-6516 www.lenzinc.com

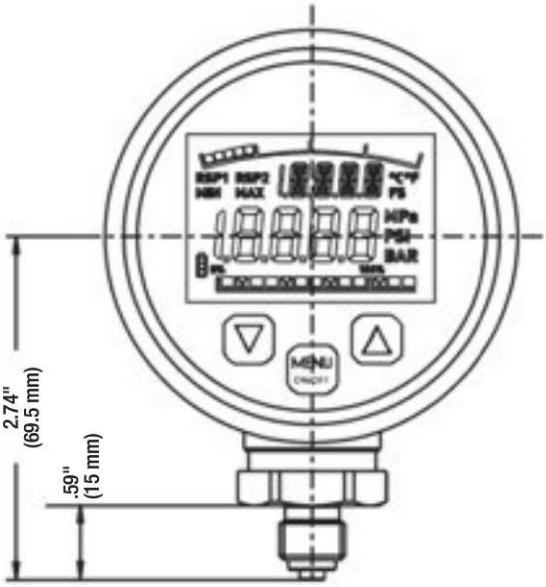

1/2 NPT male
Order code: 8N

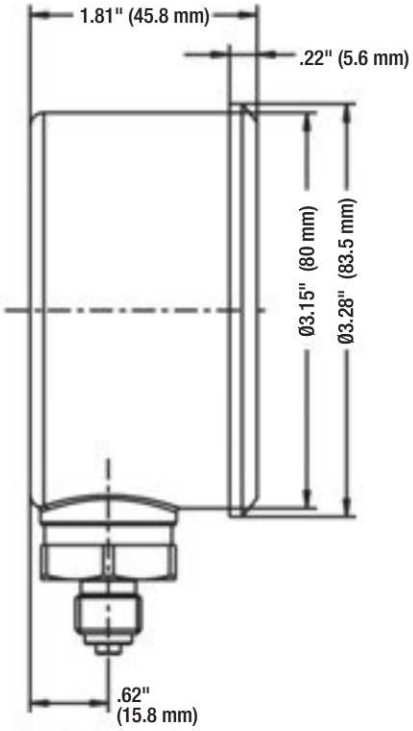

1/4 NPT male
Order code: 4N

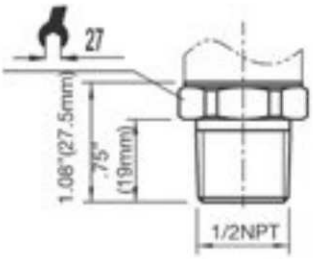

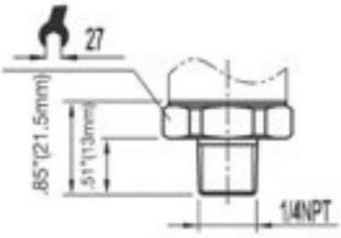

Ordering Code

LDPG30-S - C - 30-30 - 4N - PB

MODEL	
LDPG-30-S	STANDARD
LDPG-30-E	ENHANCED

PRESSURE	
G	GAUGE
C	COMPOUND

PRESSURE RANGE	
30-30	-30HG TO 29 PSI
30-72	-30HG TO 72 PSI
30-145	-30HG TO 145 PSI
30	0 TO 30 PSI
60	0 TO60 PSI
145	0 TO 145 PSI
300	0 TO 300 PSI
600	0 TO 600 PSI
1450	0-1450 PSI
2M	0-2000 PSI
3M	0-3000 PSI
5M	0-5000 PSI
7500	0-7500 PSI
10M	0-10,000 PSI

PROCESS CONNECTION	
4N	1/4" NPT
8N	1/2" NPT

OPTIONS	
PB	PROTECTIVE BOOT

Digital Gauge

Model No. LDPG-30

Specifications		Model LDPG-30					
Pressure ranges	psi	-30 INHG ... 29 psi		-30 INHG ... 72 psi		-30 INHG ... 145 psi	
Over pressure safety	psi	70		145		290	
Burst pressure	psi	85		170		360	
Pressure ranges	psi	30	60	145	300	600	1450
Over pressure safety	psi	70	145	290	580	1450	2900
Burst pressure	psi	85	170	360	725	1740	11600
Pressure ranges	psi	2000	3000	5000	7500	10000	
Over pressure safety	psi	4640	7250	11600	17400	21750	
Burst pressure	psi	14500	17400	24650	34800	43500	
Materials							
Wetted parts							
» Pressure connection		1.4571, Stainless steel 316TI					
» Pressure sensor		Ceramic Al_2O_3 96%, NBR {EPDM } (up to 0 ... 600 psi)					
		XM-13 (1.4534) (≥ 1450 psi)					
Case		1.4301, Stainless steel 304					
Power supply		2x 1.5 V Type AA batteries					
Operating time	h	4000 (AA 2000 mAh)					
Internal sampling rate	ms	200					
Insulation voltage	VDC	500					
Display accuracy	% of span	± 0.25% B.F.S.L.					
Zero Offset	% of span	0.1 (Power-up reset)					
Zero adjustability	% of span	20 (via Tare-Function with model LDPG-30-E)					
Hysteresis	% of span	0.1					
Non-repeatability	% of span	0.1					
Long-term stability per year	% of span	0.2					
Long-term drift	% of span	0.1					
Permissible temperature of							
Medium		-4°F ... +185°F (-20°C ... +85°C) (up to 0 ... 600 psi)					
		-22°F ... +212°F (-30°C ... +100°C) (≥ 1450 psi)					
Ambient		+14°F ... +140°F (-10°C ... +60°C)					
Storage		-4°F ... +158°F (-20°C ... +70°C)					
Operating temperature range		+32°F ... +140°F (0°C ... +60°C)					
Temperature coefficients within							
compensated temp range							
Mean TC of zero	% of span	0.15 / 10k					
Mean TC of span	% of span	0.15 / 10k					
CE-conformity							
Pressure equipment directive		97/23/EC					
EMC directive		89/336/EEC emission (class B) and immunity according to EN 61 326					
Case rotation	°	300° (only with model LDPG-30-E)					
		LDPG-30-S		**LDPG-30-E**			
Principle		7 segment LCD 4 digit		7 segment LCD 4 1/2 digit			
				14 segment LCD 4 1/2 digit (2nd display)			
Digit size		.43" (11 mm)		.43 (11 mm) and .28" (7 mm)			
Display		-999 ... 9999		-1999 ... 19999			
Background illumination		No		Included			
Bar graph with trailing pointer		Included		Included			
function							
Min/Max memory		Included		Included			
Auto On/Off		Optional (ex works)		15/30/60/120 min			
Tare adjustment		No		Included			
Units bar, psi, MPa		Included		Included			
Password protection		No		Included			
Reset factory setting		No		Included			
Weight		Approx. 14oz. (400 g)					

{ } Items in curved brackets are optional extras for additional price.

Phone: 937/277-9364 FAX: 937/277-6516 www.lenzinc.com

Gauge Isolator Valve

Model No. GV-4
Single Station
Specifications

- Push knob to read
- Can be locked in actuated position
- Panel or in-line mounting
- Made of press forged steel
- 5800 P.S.I. working pressure
- Maximum panel thickness 5/16"
- 1/4" NPT ports
- Viton seals
- Compatible with petroleum based fluids and other fluids compatible with Viton seals
- Operating temperature -30°F to +240°F (-22C to +115C)

Ports: 1/4" NPT
Working Pressure: 5800 P.S.I.

Gauge isolators prevent damaging pressure surges from reaching the gauge except when a reading is required. They help to extend gauge life and maintain accuracy.

Gauge Shutoff Valve

Model # GV-4R

The LENZ Gauge Shutoff Valve is a simple effective throttling and shut-off device to isolate and protect hydraulic pressure gauges. It will quickly and positively shut off the gauge from the line pressure or, when partially opened, reduce or eliminate gauge pointer pulsations. The leakproof needle stem is internally retained.

Features:

- Steel Construction
- 5000 P.S.I. Maximum System Pressure
- Viton Seals-Compatible With Most Fluids
- Finger Tip Adjustment and Locknut

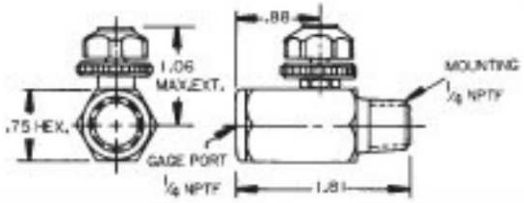

Gauge Shutoff Valve

Model # GV-4N
Standard Features:

- **Operating Temperature:** Media: max. 200°F (+93°C); min. 0°F (-18°C)
- **Flow Rate:** Max. C_v = 0.42
- **Orifice Size:** 0.172" (4.37mm)

Features:

- **Pressure Rating:** 6000 PSI
- **Valve Body:** Carbon Steel
- **Bonnet:** Carbon Steel, 12L14
- **Valve Stem:** 316 Stainless Steel
- **Handle:** T, Carbon Steel
- **Handle Bolt:** Carbon Steel, 12L14
- **Stem Seals:** Viton® O-Ring, Teflon® Back-up Ring

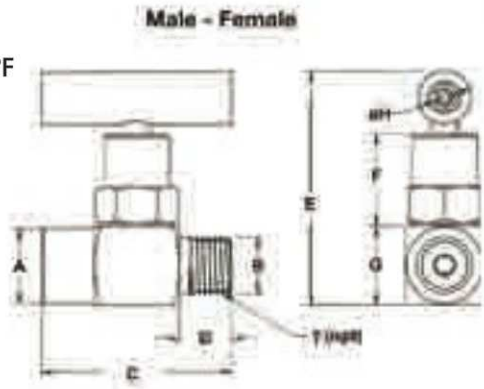

TYPE	WEIGHT	KEY	A	B	C	D	E	F	G	H	T
GV-4N	0.4 lbs.	mm in.	18.3 0.72	13.7 0.54	46 1.81	12.7 0.50	63 2.48	22 0.88	19 0.75	12.7 0.50	1/4"

Optional Threads

Lenz Pressure gauges can be ordered with special thread connections. (50 Piece Minimum)

1) **S.A.E. Thread:** (7/16"-20 w/ "O"-Ring, washer & locknut)
Example: S.A.E.-AFC-3M-25
2) **J.I.C. Thread:** (7/16"-20 Male 37° Flare)
Example: JIC-AFC-3M-25RC
3) **B.S.P. Thread:** (1/4" R-19, 1/4" BSP-19, G-1/4")
Example: BSP-AFC-3M-25

Maximum Indicating Dial

Lenz's maximum indicating dial follows the regular (black) pointer on increasing pressure and remains at the highest point until it is reset by a knob at the front of the window, Silicone filled. Excellent for determining pressure surges or spikes in system.

Example: BAC-5M-25-MID/AFC-3M-25-MID
(Installed at Factory)

Adapters

4-PC 3255-4-4 4-4 APC 4-4 BSP

MODEL NUMBER	DESCRIPTION
4-PC	1/4" NPT FEMALE x 1/4" NPT FEMALE PIPE COUPLER
3255-4-4	1/4" NPT FEMALE x 7/16"-20 MALE JIC 37° FLARE
4-4 APC	1/4" NPT FEMALE x 7/16"-20 S.A.E. MALE WITH O-RING
4-4 BSP	1/4" NPT FEMALE x 1/4"-19 BSP THREADS

New Vent Plug for Low Pressure Glycerin Gauges

LENZ introduces a new "Open/Close" Vent plug for low pressure applications less than 100 P.S.I..
In order for the pressure gauge to have accurate readings, vent needs to be in open position.

After shipment, pointer may not rest at zero due to internal case pressure buildup caused by temperature variations. Accuracy may be significantly reduced. To restore gauge to operating condition, move lever of vent plug to "Open" position.

If gauge is not mounted upright, move lever to closed position after venting. Repeat procedure at regular intervals to maintain pressure gauge accuracy.

Vent options available on BAC, AFC, SS Series

Siphons

LENZ siphons should be used to protect pressure instruments in live steam service or other hot vapor application up to 400 F. The siphon when first installed should be filled with water or suitable separating fluid. The vapor condenses inside the coil of the siphon which prevents the high temperature vapors from reaching the sensing element of the pressure instrument. If you require higher pressures or temperatures please consult the factory.

MODEL NUMBER	DESCRIPTION	PRESSURE
4-SIP	1/4" x 1/4"-MALE (STEEL)	2500
4-SIP-SS	1/4" x 1/4"-MALE (STAINLESS)	2100
8-SIP	1/2" x 1/2"-MALE (STEEL)	1900
8-SIP-SS	1/2" x 1/2"-MALE (STAINLESS)	1600

Add-HP for Schedule 80 for 3000 PSI

Couplings

(To attach pressure gauges to siphons)

MODEL NUMBER	DESCRIPTION
4-PC	1/4" x 1/4"-MALE (STEEL)
4-PC-SS	1/4" x 1/4"-MALE (STAINLESS)
8-PC	1/2" x 1/2"-MALE (STEEL)
8-PC-SS	1/2" x 1/2"-MALE (STAINLESS)

4-PC

SIP

Vertical Applications

Chemical Seals

Chemical seals also referred to as diaphragm seals, are used to isolate pressure gauges from clogging and /or corrosive media.
The upper seal is also filled with silicone fluid. Any pressure applied by the process medium to the seal diaphragm is hydraulically transmitted to the pressure element of the gauge, thus generating a pressure reading on the pressure gauge. Factory Installed. Must be ordered with gauges.

Lenz Heavy Duty Seals

MODEL NUMBER	DESCRIPTION
HDS-4x4	1/4" x 1/4" FEMALE (STEEL)
HDS-4x4-SS	1/4" x 1/4" FEMALE (STAINLESS)
HDS-8x8	1/2" x 1/2" FEMALE (STEEL)
HDS-8x8-SS	1/2" x 1/2" FEMALE (STAINLESS)

Lenz Mini-Seal

MODEL NUMBER	DESCRIPTION
MS-4x4-SS	1/4" x 1/4" FEMALE (STAINLESS)
MS-4x8-SS	1/4" x 1/2" FEMALE (STAINLESS)
MS-8x8-SS	1/2" x 1/2" FEMALE (STAINLESS)

HDS-8x8

MS-4x4

Gauge Snubbers

LGS

- 1/4" NPT male x female connections
- Brass or Stainless Steel materials
- Brass 5,000 P.S.I. maximum, 10 Micron
- Stainless Steel 15,000 P.S.I. maximum, 5 Micron
- Maximum temperature 14F to 248F (-10C to 120C)

LGS

LGS-SS

Lenz gauge snubbers protect pressure gauges against pressure surges and shocks.

ORDERING CODE

MODEL — SIZE — MATERIAL

SERIES
LGS

SIZE
250

Material	
OMIT	BRASS
SS	STAINLESS STEEL

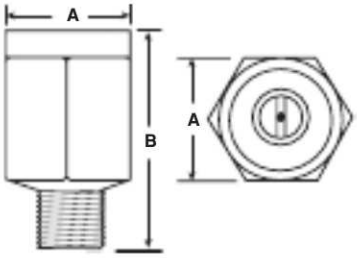

TECHNICAL BULLETINS ON THE WEBSITE

TB.PG01.708	Advantages of Liquid Filled Gauges
TB.PG02.708	Chemical Compatibility Table
TB.PG03.708	Selecting a Pressure Gauge
TB.PG04.708	Available Dial Artwork
TB.PG05.708	Standard Dial Layouts
TB.PG06.708	Pressure Gauges
TB.PG07.708	Gauge Isolators
TB.PG08.708	Glycerin MSD Sheet
TB.PG09.708	Diaphragm, Chemical Seals Principles
TB.PG10.708	LDPG-30 Operating Manual
TB.PG11.708	LZAT Transducer Operating Manual
TB.PG12.708	MID Diagnostics Gauges
TB.PG13.708	Installation Operating Instructions for Pressure Gauges
TB.PG14.708	MS Mini Seals
TB.PG15.708	HDS Heavy Duty Seals
TB.PG16.708	BMT Installation Instructions
TB.PG17.708	LGS Gauges Snubber Specifications
TB.PG18.708	SIP Siphon Specifications
TB.PG19.708	DI 15 Operating Instructions
TB.PG20.312	Operating Instructions for Diaphragm Seal
TB.PG21.813	Gauge Scales Per EN837

Notes

Request or download these other LENZ Catalogs

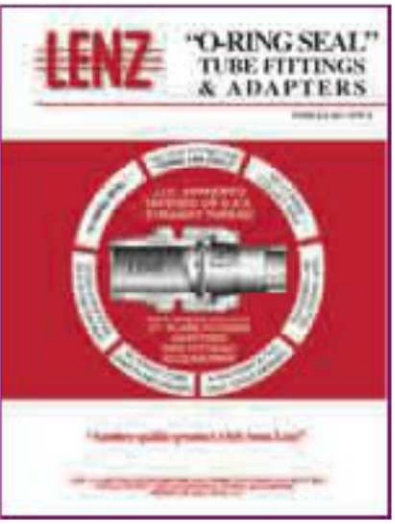

CATALOG 127R-A
60 Pgs. "O"-Ring Seal Tube Fittings, 37º Flare Tube Fittings, Pipe Fittings, Adapters & Accessories.

CATALOG HP-413
24 Pgs. High & Medium Pressure Hose Fittings & Assemblies, Adapters.

CATALOG AD-90
48 Pgs. Adapters, Pipe Fittings, Adapter Unions, J.I.C.-S.A.E. Tube Fittings, offered in Steel & Stainless Steel.

HYDRAULICS
WITH A GLOBAL REPUTATION

Distributed By: